STANDARD OVEN

STANDARD FEATURES

- Heavy duty modular standard oven base. 36" wide to accommodate modular rangetops of various sizes to form freestanding ranges, stacked ovens, custom lineups, or cooking suites.
- High performance stainless steel tubular U-burner at 40,000 Btu/hour
- Direct vent flue with standard heat exchanger system for maximum heat transfer from gas burner to oven cavity *(Patent Pending)*
- 28" W x 27" D x 14.5"H heavy duty stainless steel oven cavity interior with flame spreader for even heat distribution throughout
- Removable stainless steel drip tray for ease of cleaning



Model number as shown HSO36

AUTODESK REVIT

Counter Balanced Soft Opening Door



- Counter-weight oven door hinge system with hydraulic soft opening capabilities *(Patent Pending)*
- 5-position rack supports that are designed to allow placement of full size sheet pans without the use of an oven rack
- 2 heavy duty nickel plated oven racks included
- High efficiency insulated, water-proof door and oven cavity
- Electronic thermostatically controlled oven from 150°F to 650°F
- Intermittent Pilot System with solenoid safety valve and flame sense
- Full-width Marquise accented™ stainless steel oven door handle and Zamak die cast end caps *(Patent Pending)*
- Heavy gauge welded body construction
- Zamak die cast knobs and bezels with set screws
- Stainless steel front, sides, and bottom
- ¾" rear manifold with connection options
- 6" height adjustable legs (4)

Intermittent Pilot

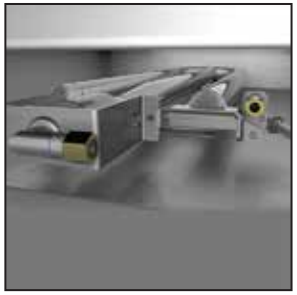

Heat Exchanger

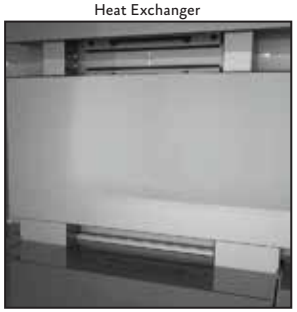

OPTIONS

- Colors (contact sales department for available colors)
- Customizable Marquise accented™ control panel (*Patent Pending* / contact sales department for available options)
- Stainless steel backcover
- Additional oven rack
- 6" height adjustable casters (4). Two (2) with brakes
- Curb base

www.hestancommercial.com phone 888.905.7463 3375 E. La Palma Ave., Anaheim, CA 92806

STANDARD OVEN

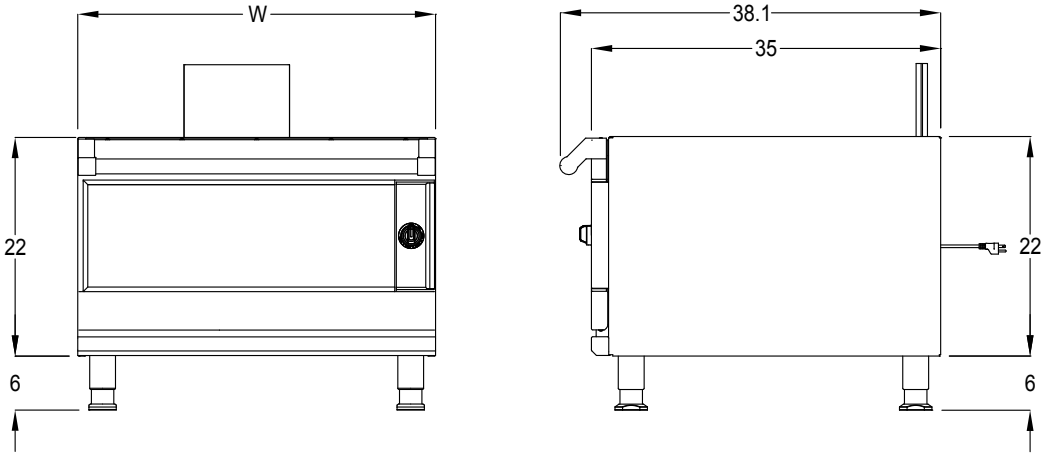

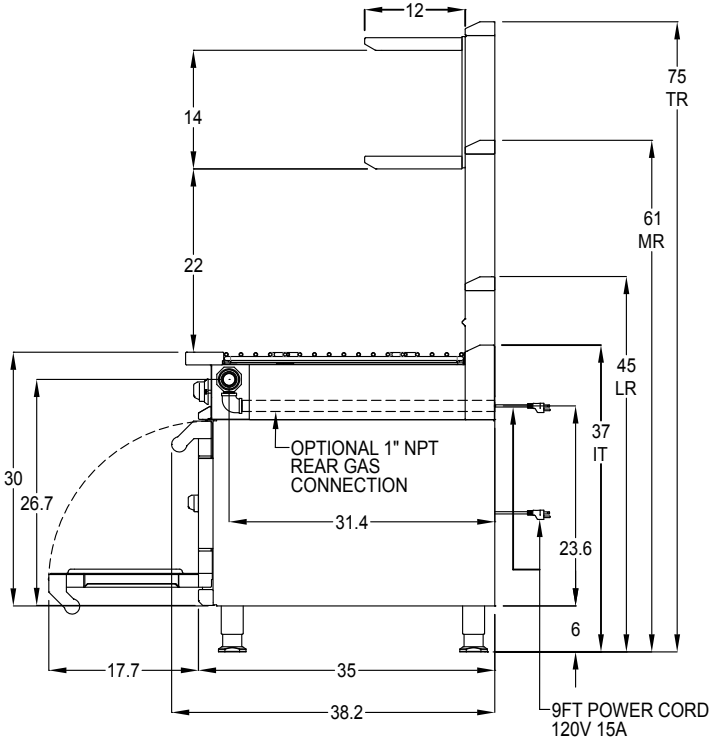

Model	Description	Gas [Btu/HR]	Approx SHP WT	MAX AMP Draw	Width (W)
H SO 36	36" wide Standard Oven Base	40,000	465	1	36"

Note: Hestan Commercial products are not approved or recommended for residential use. Hestan Commercial Corporation reserves the right to change materials and specifications without notice. Specify type of gas when ordering. Specify altitude when above 2,000 ft.

ELECTRICAL : 120V, 60Hz, 15A, 1 phase.

GAS : 3/4" male NPT rear gas connection available. Minimum gas supply is 7" water column for natural gas and 11" for propane. Operating pressure at the manifold is 5" water column for natural gas and 10" for propane. All units require a regulated gas supply.

VENTILATION : The product is required to be installed under an exhaust hood.

CONTACT US: www.hestancommercial.com phone 888.905.7463 3375 E. La Palma Ave., Anaheim, CA 92806