MAXX COLD®
V-Series

Project Name: _____
Location: _____
Item #: _____
Qty: _____

Maxx Cold V-Series 1 Door Undercounter Freezer, in Stainless Steel

MVF29UHC



The Maxx Cold V-Series 1 Door Undercounter Freezer provides convenient frozen storage without sacrificing valuable floor space in your commercial kitchen. This compact undercounter freezer features a stainless steel exterior and powder coated aluminum interior for durability and ease of cleaning. Measuring 29 inches wide, it offers 7.8 cubic feet of storage and has one door with an easy-to-grip recessed handle. This stainless steel undercounter freezer has one wire shelf for ingredients.

ELECTRIC

Voltage	Utility Frequency (Hz)	Power Phase	NEMA 5-15P
115V	60	1ph	

Cord Length (Inches): 10"
Plug Type: NEMA 5-15P
Cord set included

3RD PARTY APPROVALS

C ETL LISTED US Intertek

ETL SANITATION LISTED Intertek

WARRANTY (USA / CANADA)

One (1) Year Limited Warranty on Parts and Labor, One (1) Year Warranty on Compressor and Evaporator

Contact Maxx Cold for details at TechnicalServices@TheLegacyCompanies.com or 877.368.2797

1 YEAR PARTS & LABOR WARRANTY 1 YEAR COMPRESSOR

FEATURES AND CONSTRUCTION

- Stainless steel exterior and powder coated aluminum interior construction
- One door with easy-to-grip recessed door handle
- Provides 7.8 cu ft of frozen storage
- One adjustable heavy-duty wire shelf
- Includes four (4) 3" swivel casters (two with brakes) for easy mobility and cleaning
- Compact size maximizes kitchen space by fitting under counters and other work spaces
- Offers quick access to frozen ingredients
- Solid state digital control system
- LED temperature display
- Accommodates full-size sheet pans
- Temperature range of 0°F to 10°F to hold your products at their ideal storage conditions
- Equipped with integrated condensate evaporator; therefore, no drain line connection is needed

STORAGE CAPACITY

- Cubic Feet: 7.8 cu. ft.

TEMPERATURE

- Holding Temperature (Fahrenheit): 0° - 10°

These models are designed to operate in an environment where temperature and humidity do not exceed 75°F (24°C) and 55% relative humidity

The Legacy Companies
3355 Enterprise Avenue, Suite 160 • Fort Lauderdale, FL 33331
Sales: 954.202.7419 • Sales@TheLegacyCompanies.com • www.maxx-cold.com

Maxx Cold V-Series 1 Door Undercounter Freezer

MVF29UHC

TOP VIEW

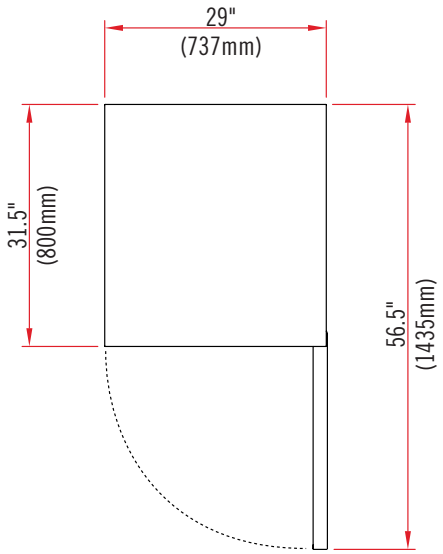

FRONT VIEW

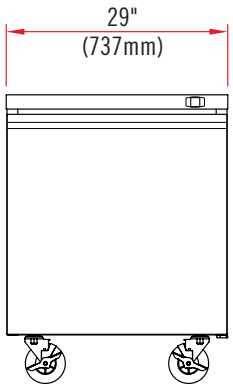

SIDE VIEW

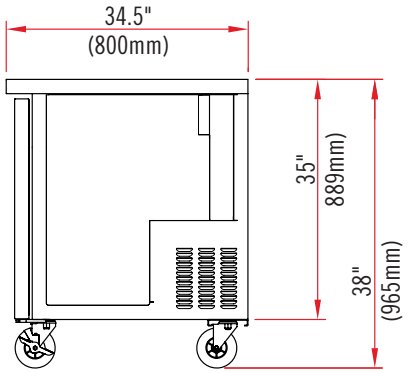

Undercounter

Doors	Shelves	Amps	Refrigerant Type / Oz.	Capacity	Assembled Dimensions L x W x H (in)	Item Weight (lbs)	Shipping Weight (lbs)
1	1	2.5A	R290 1.23	7.8 cu. ft.	34.50" x 29.00" x 38.00"	132.0	170.0

INSTALLATION

- Shorter caster options are available to lower the overall height of the unit to satisfy ADA or other low profile requirements.

Due to periodic changes in designs, methods, procedures, policies and regulations, the specifications contained in this document are subject to change without notice. While we exercise good faith efforts to provide information that is accurate, we are not responsible for errors or omissions in information provided or conclusions reached as a result of using the specifications. By using the information provided, the user assumes all risks in connection with such use.