3 Compartment - 10" x 14" Drop In Sink w/ Dual 12" Drainboards

Drop In Sinks

Certifications:

NSF COMPONENT



Features:

- Includes BKDR-4 Drains
- (2) Corrugated Drainboards
- 8" O.C. Deck Mount Faucet Holes
- Marine Edge

Material:

- T-304 18 ga. Stainless Steel Bowl

Options:

- Upgrade to Heavy Duty Faucets
- Optional Prep Basket (BK-PB1014)
- "-P-G" Includes BK8D-10-G Lead Free Faucet



Optional Prep Basket (BK-PB1014)

Part Number	Unit Size (l x w x d)	Drainboard Length	Bowl Size (l x w x d)	Faucet Holes	Included Faucet	Recommended Cutout Size (l x w)
DDI3-10141028-12T	58 1/8 " x 20" x 10 5/8"	12"	10" x 14" x 10"	(1) set	N/A	57 3/4" x 19 1/2"
DDI3-10141028-12T-PG	58 1/8" x 20" x 10 5/8"	12"	10" x 14" x 10"	(1) set	BK8D-10-G	57 3/4" x 19 1/2"

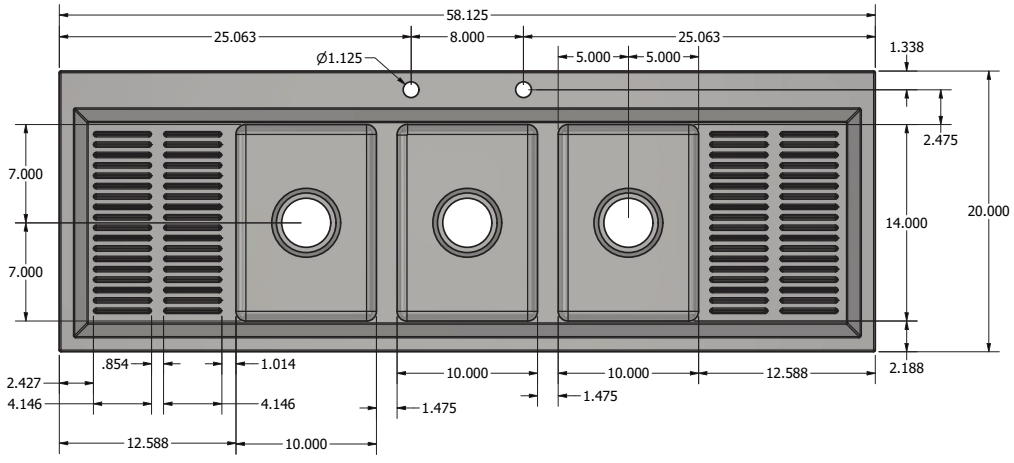

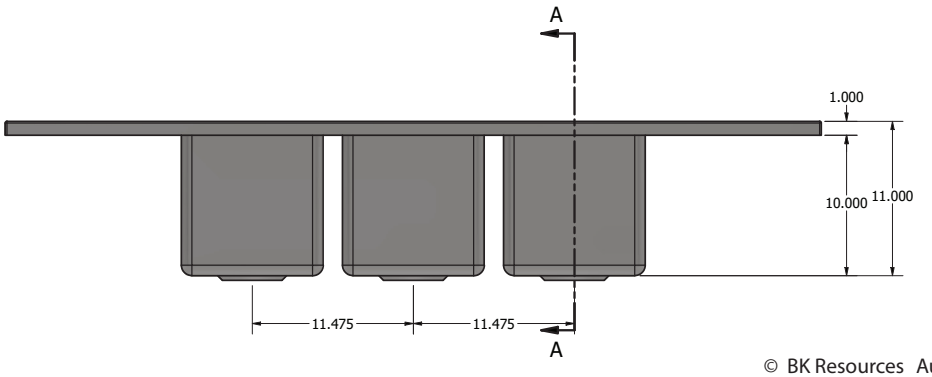

© BK Resources August 2026

BK RESOURCES

3 Compartment - 10" x 14" Drop In Sink w/ Dual 12" Drainboards

RECOMMENDED CUT OUT SIZE

