Deep Drawn 1 Compartment Drop-In Sink

Drop In Sinks



Certifications:

NSF COMPONENT

Features:

- Deep Drawn Construction for a seamless and more appealing design
- Traditional Top Mount
- Includes BKDR-4 Drain
- Faucet Holes 8″ O.C.

Material:

- T-304 18 ga. Stainless Steel

Options:

- Upgrade to OptiFlow Heavy Duty Faucets or Evolution Stainless Steel Faucets
- Wrist Blades
- "-P-G" Includes BK8D-8G-G Lead-Free Faucet

Part Number	Unit Size (l x w x d)	Bowl Size (l x w x d)	Included Faucet	Product Weight (lbs)
DDI-28161028	31 1/4″ x 20 3/4″ x 10″ (d)	28″ x 16″ x 10″ (d)	-	18.50
DDI-28161028-P-G	31 1/4″ x 20 3/4″ x 10″ (d)	28″ x 16″ x 10″ (d)	BK8D-8G-G	22.50

Recommended Cutout Size

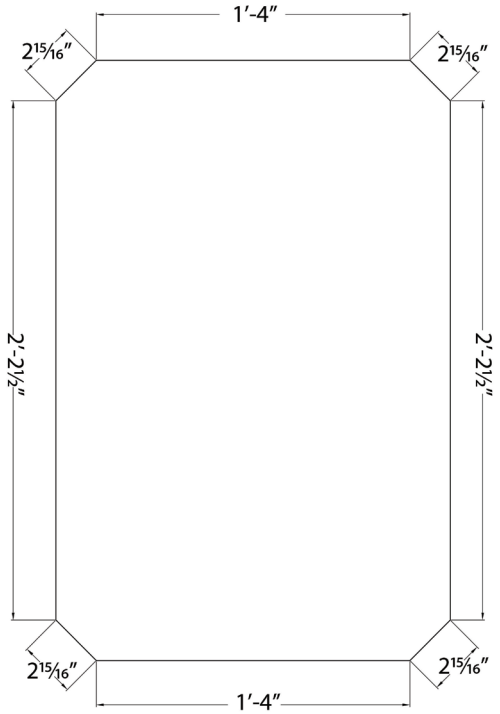

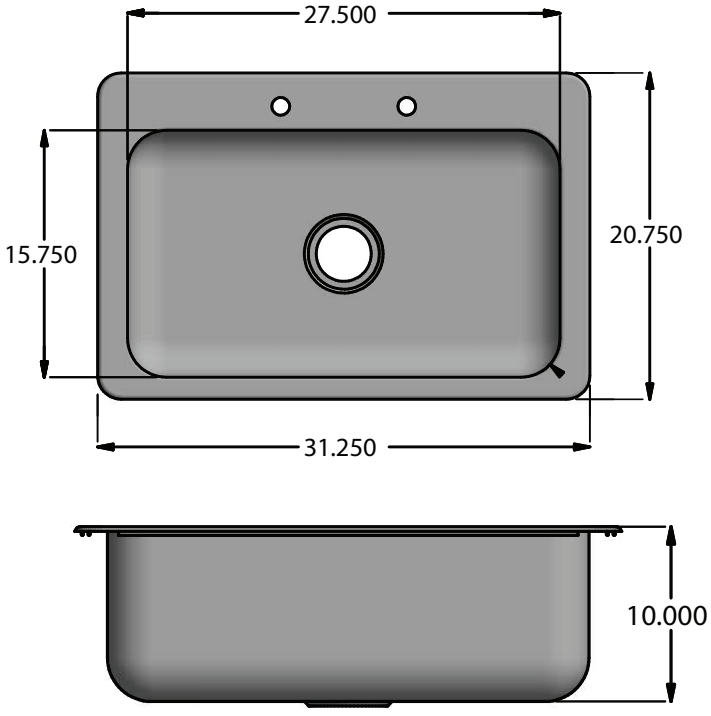

PRODUCT DATA SHEET

BK RESOURCES

© BK Resources August 2026