ADVANCE TABCO®
SMART FABRICATION™

STAINLESS STEEL

Free-Standing Bar Drainboards NSF

18" and 21" Wide Units

Item #: _____ Qty #: _____

Model #: _____

Project #: _____



SLD Series
18" Wide Units



CRD Series
21" Wide Units

FEATURES:

Embossed and seamless drainboard with drain.
4" backsplash.
Galvanized legs with adjustable plastic bullet feet.
Adjustable galvanized side cross-bracing.
CRD Series has rear deck for extra storage.

MECHANICAL:

1" IPS drain

MATERIAL:

22 gauge, 300 stainless steel
Sides: 20 gauge, 430 stainless steel
Understructure: 22 gauge galvaneal front/back;
11 gauge electrogalvaneal leg channel
Legs: 1 5/8" O.D. 18 gauge, galvanized steel with adjustable plastic bullet feet

OPTIONAL:

SU-10A - 18" stainless steel legs with cross-bracing
SU-40 - Prep unit for installation of speed rail
SU-68 - Omit corrugation on drainboard
SU-1824R or L - Make SLD-2-X a corner drainboard
SU-2124R or L - Make CRD-2-X a corner drainboard

18" WIDE Model #	Approx. Weight	Approx. Cu. Ft.	21" WIDE Model #	Approx. Ship Weight	Approx. Cu. Ft.	O.A. Length (A)
SLD-12	26 lbs.	7	CRD-12	28 lbs.	8	12"
SLD-18	29 lbs.	7	CRD-18	30 lbs.	8	18"
SLD-2	35 lbs.	7	CRD-2	35 lbs.	8	24"
SLD-30	40 lbs.	10	CRD-30	41 lbs.	12	30"
SLD-3	42 lbs.	10	CRD-3	47 lbs.	12	36"
SLD-4	55 lbs.	12	CRD-4	51 lbs.	16	48"

ADVANCE TABCO®
SMART FABRICATION™
www.advancetabco.com

Customer Service Available To Assist You 1-800-645-3166 8:30 am - 7:00 pm E.S.T.

For Orders & Customer Service:
Email: customer@advancetabco.com or **Fax:** 631-242-6900

For Smart Fabrication™ Quotes:
Email: smartfab@advancetabco.com or **Fax:** 631-586-2933

DIMENSIONS and SPECIFICATIONS

TOL Overall: ± .500” Interior: ± .250”

ALL DIMENSIONS ARE TYPICAL

SLD Series

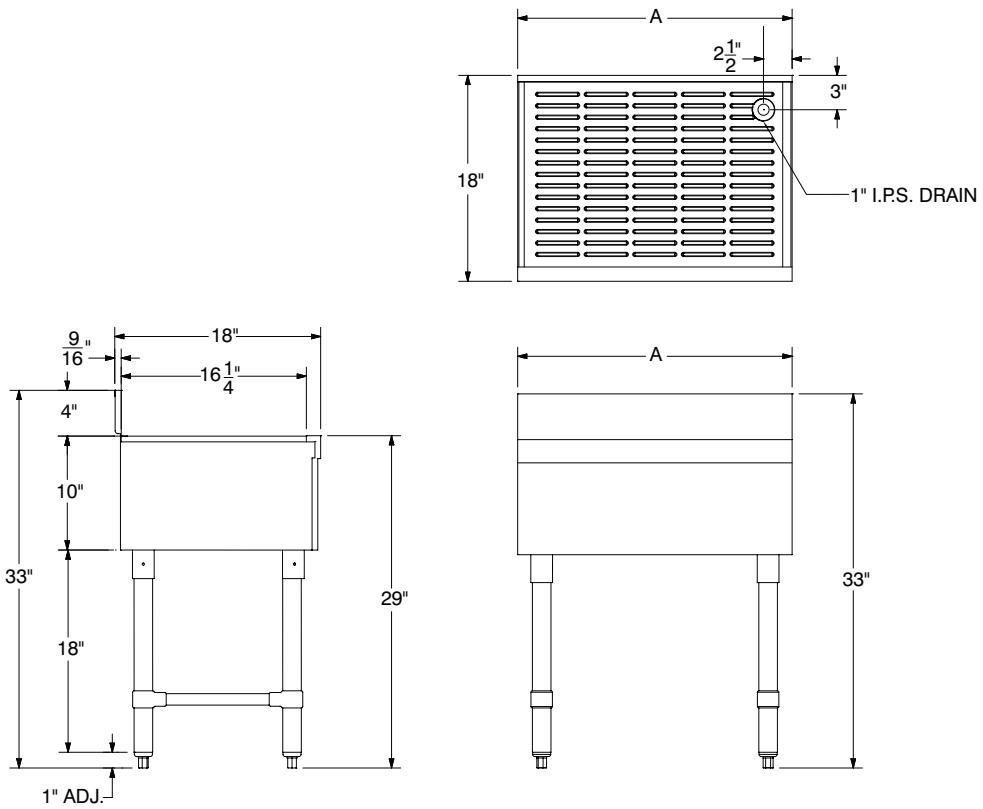

CRD Series

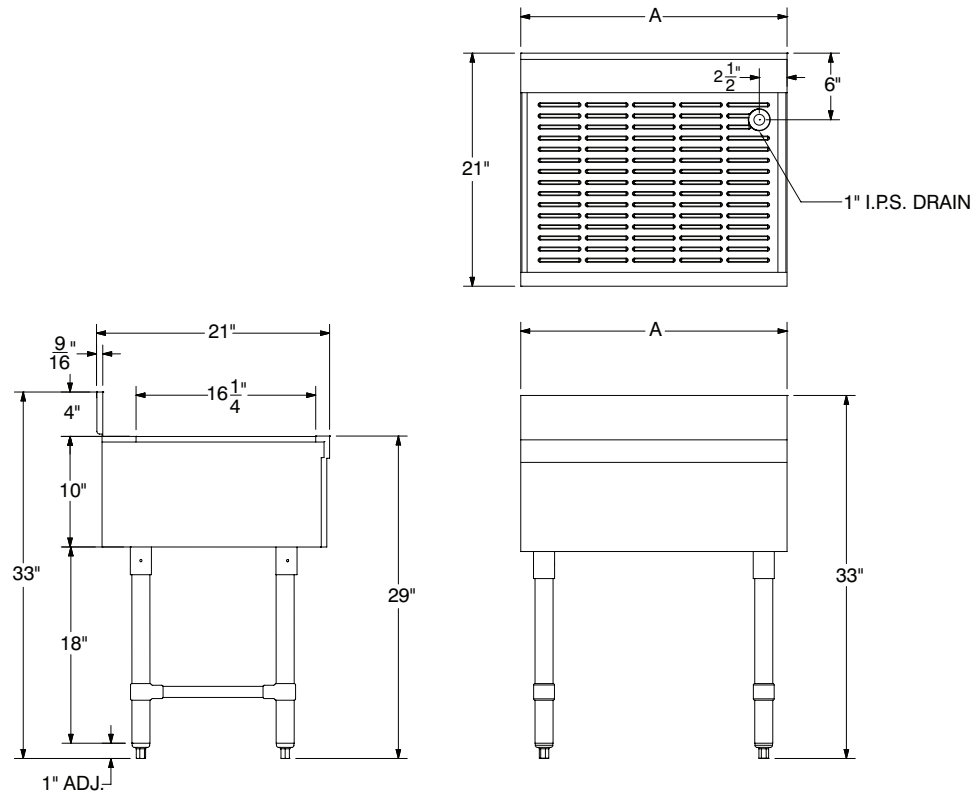

ADVANCE TABCO

SMART FABRICATION™

325 Wireless Boulevard, Hauppauge, NY 11788

ADVANCE TABCO is constantly engaged in a program of improving our products. Therefore, we reserve the right to change specifications without prior notice.

© ADVANCE TABCO, OCTOBER 2026