ADVANCE TABCO
SMART FABRICATION™

STAINLESS STEEL

LAVATORY SINKS

A.D.A COMPLIANT

Conforms To NSF 61/9 Lead Free Requirements

HEAVY DUTY DESIGN!



7-PS-LAV-1
Single Center Hole



7-PS-LAV-4
Three 4" O.C. Holes



7-PS-LAV-8
Three 8" O.C. Holes

Item #: _____ **Qty #:** _____

Model #: _____

Project #: _____

FEATURES:

Heavy duty, 16 gauge, Type 304 Stainless steel.
Fabricated 16" x 11-1/2" x 5-1/2" Sink bowl.
One-piece design with side supports.
2" stainless steel drain with overflow,tailpiece & strainer plate.
Marine "No-Drip" edge on 3 sides.
A.D.A. Compliant.

Faucet Hole Configuration Models (Faucet not included):

7-PS-LAV-1 Single center hole for faucet.
7-PS-LAV-4 3 faucet holes. 4" O.C.
7-PS-LAV-8 3 faucet holes. 8" O.C.

CONSTRUCTION:

All TIG welded.
Welded areas blended to match adjacent surfaces and to a satin finish.
Body made from one sheet of stainless steel.

MATERIAL:

16 gauge, type 304 series stainless steel.
Wall mounting bracket is Galvanized and of offset design.

MECHANICAL:

1-1/2" I.P.S. stainless steel drain.

FAUCETS & ACCESSORIES



6" Extended Swing Spout Faucet
Deck Mounted.
6" extended "D" spout.
Wrist handles.
K-208



8" Swing Spout Faucet
Deck Mounted.
8" swing spout.
Blade style handles.
K-50



3-1/2" Gooseneck Faucet
Deck Mounted.
3-1/2" spout.
K-52 Blade style handles.
K-56 Wrist style handles.



3-1/2" Gooseneck Faucet
Deck Mounted.
3-1/2" spout.
Blade style handles.
K52-EC



3-1/2" Gooseneck Faucet
Deck Mounted.
3-1/2" spout.
Blade style handles.
K-62



5-1-2" Gooseneck Faucet
Deck Mounted.
Wedge handles.
K-132



Fixed Spout Electronic Faucet
Hands-Free.
Deck Mounted.
A/C or Battery Powered.
K-183



Metered Faucet
Deck Mounted.
10-30 seconds metering cycle.
Adjustable metering cycle.
Mixing valve.
K-190



5" Gooseneck Electronic Faucet
Hands-Free.
Deck Mounted.
A/C or Battery Powered.
K-180

Electronic Soap Dispenser
Wall Mounted.
Battery Powered (Not included)s.
Includes Bracket & Hardware.
Uses Liquid Soap.
7-PS-104



Stainless Steel Soap Dispenser
Wall Mounted.
Uses Liquid Soap.
K-13



Wall Mounted Paper Towel Dispenser
Holds C-Fold Style Towels
7-PS-35



ADVANCE TABCO
SMART FABRICATION™
www.advancetabco.com

Customer Service Available To Assist You 1-800-645-3166 8:30 am - 7:00 pm E.S.T.

For Orders & Customer Service:
Email: customer@advancetabco.com or Fax: 631-242-6900

For Smart Fabrication™ Quotes:
Email: smartfab@advancetabco.com or Fax: 631-586-2933

DIMENSIONS and SPECIFICATIONS

FAUCET HOLE CONFIGURATIONS

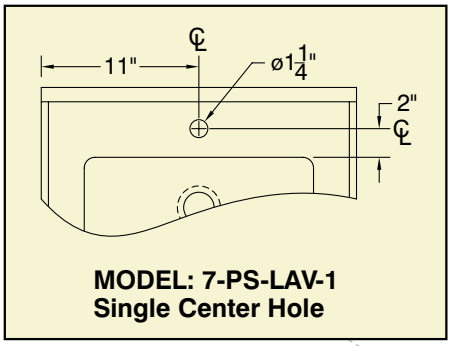

MODEL: 7-PS-LAV-1
Single Center Hole

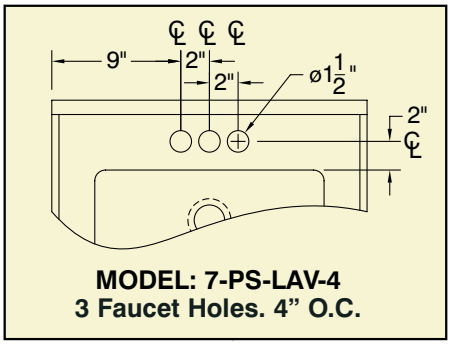

MODEL: 7-PS-LAV-4
3 Faucet Holes. 4" O.C.

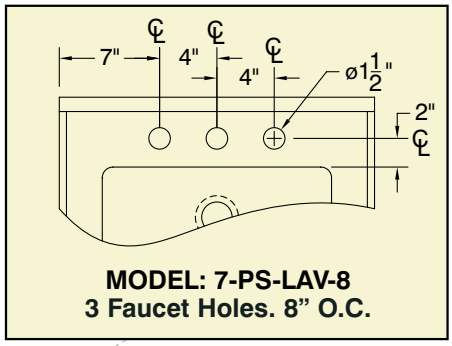

MODEL: 7-PS-LAV-8
3 Faucet Holes. 8" O.C.

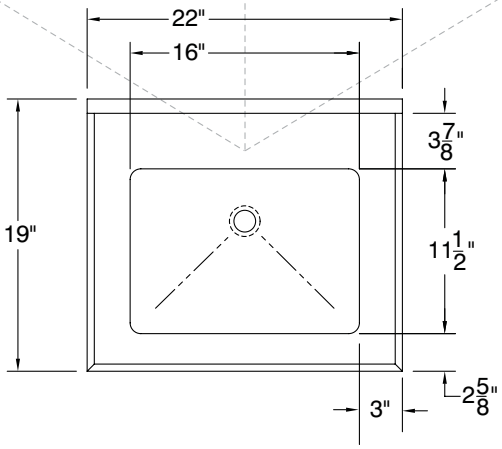

Faucet Not Included.
See Page 1 or visit us on the web for more faucet options!
advancetabco.com

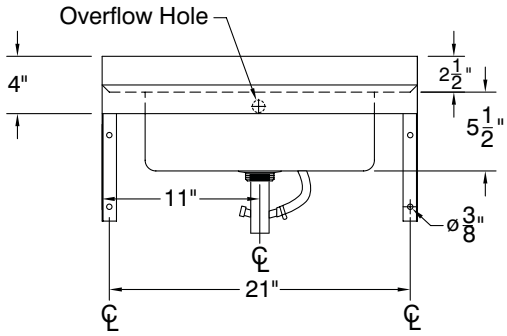

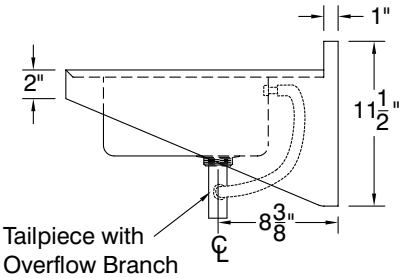

Approx. Ship Wt. 14 lbs.

⚠WARNING:
Equipment that includes a faucet may expose you to chemicals, including lead, that are known to the State of California to cause cancer or birth defects or other reproductive harm. For more Info.,visit www.p65warnings.ca.gov.

ADVANCE TABCO is constantly engaged in a program of improving our products. Therefore, we reserve the right to change specifications without prior notice.

© ADVANCE TABCO, OCTOBER 2026