Champion®
The Dishwashing Machine Specialists

PROJECT: _____

ITEM # _____ QTY: _____

MODEL # _____

AIA # _____ SIS # _____

66 PRO-FF w/ Heat Recovery Electric

HIGH TEMPERATURE ELECTRIC RACK CONVEYOR



Rendered image is for general visual representation only. Please refer to specifications for the latest detailed product information.

Customers save $1500 per year in energy cost on average when compared to a standard machine!

Certifications apply to the machine only.

STANDARD FEATURES

- **Exhaust Air Energy Recovery** reuses waste energy to preheat incoming water
- **44" Single Tank + 22" Prewash, Frontfeed**
- **Perpetual Rack Advance System** with digital jam monitoring, and mechanical drive protection
- **Automated Delime Function** with user-customizable alert intervals
- **209 Racks Per Hour**
- **0.48 Gallons/Rack With Energy Sentinel** (idle pump shut-off)
- **Advanced Touchscreen Display** intuitive condition alerts, with user friendly cleaning and operation visual guidance, multi-lingual
- **Enhanced Visual On-board Diagnostics** quickly identify machine faults for rapid resolution and less downtime
- **Automatic Tank Fill**
- **Programmable Machine Dwell** pauses rack in wash zone for extended cleaning, NSF Certified Pot & Pan Mode
- **Automatic Drain Valve**
- **Single-Piece Hood Design**
- **Single-Piece Scrap Screen** more robust and faster cleaning
- **Single-Piece Stainless Steel Upper And Lower Wash Arm Manifolds**
- **Single-Point Electrical Connection**
- **20" Standard Vertical Clearance** accommodates 18" x 26" sheet pans
- **Fully Insulated Doors** open a full 180° for unrestricted cleaning access
- **All Stainless Steel Heavy Gauge Construction** including base, legs and feet
- **Enclosure Panels** (front and sides)
- **2 HP Pump Motor** with stainless steel impeller
- **Factory Authorized Start-Up**
- **Vent Fan Control**
- **ENERGY STAR® Certified**

SPECIFIER STATEMENT

Specified unit will be Champion Model 66 PRO-FF w/Heat Recovery Option (Electric) high temperature rack front feeding conveyor dishwashing machine. Features top mounted Prodigy HMI user interface controls with proactive maintenance software, proportional rinse, using only 100 GPH, built-in 21 kW booster, progressive anti-jam drive system, energy sentinel (idle pump shut-off), 209 racks per hour, single-piece hood design, single-piece stainless steel upper & lower wash arms manifolds, full 180° opening leak proof insulated hinged access doors.

1 Year parts and labor warranty.

In the USA:
3765 Champion Blvd, Winston-Salem, NC 27105
Tel: (336) 661-1556 Fax: (336) 661-1979
www.championindustries.com

In Canada:
2674 N. Service Rd., Jordan Station, Ontario, Canada L0R1S0
Tel: (905) 562-4195 Fax: (905) 562-4618
www.championmoyerdiebel.ca

Rev. 04/2026 Printed in U.S.A.

APPROVAL: _____ DATE: _____

Champion®
The Dishwashing Machine Specialists

66 PRO-FF w/ Heat Recovery Electric

HIGH TEMPERATURE ELECTRIC RACK CONVEYOR

ACCESSORIES

- ☐ Drain water tempering kit (unmounted)
- ☐ Table limit switch, unmounted (recommended on all rack conveyor installations) (unmounted)
  - o WHISKER STYLE
  - o BUTTON STYLE
- ☐ Vent cowl, stainless steel with 7" stacks & locking dampers
- ☐ Flanged feet (unmounted)
- ☐ Water hammer kit (unmounted)
- ☐ Chemical pump kit (detergent and rinse aid, mounted and interwired)
- ☐ Water pressure regulating valve (unmounted; standard with booster)
- ☐ Water softening system (manufactured, warrantied and serviced by Kinetico)
- ☐ Dish racks:
  - o PEG RACK
  - o FLAT RACK
- ☐ Model PRO-90B unloader (90° corner conveyor table)
- ☐ Model RCT 64 or RCT 84 roller conveyor table (see factory for custom length)
- ☐ Stainless steel rear enclosure panels
- ☐ Correctional package (contact factory)
- ☐ Lime Shield - Automated Booster Delime

OPTIONS

- ☐ Two-point electrical connection, separate for machine and booster (field convertible)
- ☐ 33" Blower dryer – electric
- ☐ Direct link connectivity solution
- ☐ Direct link plus+ connectivity solution

PRO-90B
90° Corner Conveyor table unloader available



Model RCT 64 or RCT 84
Roller conveyor table



In the USA: 3765 Champion Blvd, Winston-Salem, NC 27105 | Tel: (336) 661-1556 Fax: (336) 661-1979 | **www.championindustries.com**
In Canada: 2674 N. Service Rd., Jordan Station, Ontario, Canada L0R1S0 | Tel: (905) 562-4195 Fax: (905) 562-4618 | **www.championmoyerdiebel.ca**

Rev. 04/2026 Printed in U.S.A.

Due to an ongoing value analysis program at Champion, specifications contained in this catalog are subject to change without notice.

Champion®
The Dishwashing Machine Specialists

66 PRO-FF w/ Heat Recovery Electric

HIGH TEMPERATURE ELECTRIC RACK CONVEYOR

UTILITIES

1	**Electrical Connections** Machine electrical connection and booster electrical connection
2	**Hot Water** 25 PSI flowing pressure (machine with built-in booster) Main connection 1/2" NPT, 110° incoming water (Initial Fill = 25 Gal)
3A	**Cold Water** 30 PSI flowing connection 1/2" NPT; 55° Minimum
5A	**Drain** Connection 1-1/4" NPT Drain Max Flow Rate (g/min) 15
8	**Vents** A Stack connection – load end 150 CFM @ 1/4" static pressure B Stack connection – unload end 200 CFM @ 1/4" static pressure

Warning: Plumbing and electrical connections should be made by qualified personnel who will observe all the applicable plumbing, sanitary, and safety codes and the National Electrical Code.

Note: Water Hammer Arrestor (meeting ASSE-1010 standard or equivalent) to be supplied (by others) in common water supply line at service connection.

Plumbing Notes: Because of the variation in house-supplied steam and water pressures, steam and water pressure regulating valves (PRVs) may be needed. (Water PRV is standard on machines with booster.) The PRVs can either be purchased from Champion or obtained locally.

Champion does not endorse using on-demand (tankless) water heating systems, as well as PEX and other plumbing materials that may limit water flow, as these could impair machine performance. For optimal results, we recommend using appropriately sized conventional hot water tanks and standard copper water supply lines that adhere to our specifications. Not following these recommendations may void the manufacturer's warranty.

Water hardness of 3 grains/US Gal (0.83 Imp Gal) - 5.3 Mg/L or less

Venting Notes: Fabricated duct size: 3-7/8" x 15-7/8" (outside dimensions)

Note: Freezing air must not be allowed to be drawn down into the heat recovery coil when building vent fan is off if direct vent ducting is connected to the machine.

SPECIFICATIONS

Capacity	
Racks per hr (NSF rated)	209
Wash tank (US gal.)	17
Prewash tank (US gal.)	8
Conveyor speed (ft/min)	5.8
Conveyor speed Pot/Pan Mode (ft/min) (only one rack at a time in pot/pan)	4.5
Motor Horsepower	
Drive	1/6
Wash	2
Prewash	2
Water Consumption	
US Gal. per hr (max. use)	100
US Gal. per rack	0.48
Heating	
Tank Heat, electric (kW)	15
Electric booster (built-in) (kW supplied for 70°F rise)	21
Booster heaters completely inter plumbed, controls are interwired.	
Venting	
Load end (minimum CFM)	150
Unload end (minimum CFM)	200
Standard 20"x 20" Rack Complement	
Peg	1
Flat	1

Optional Drain Tempering: 1/2" NPT cold water connection required. 1/2" NPT drain connection from back flow preventer to house drain. (FIELD INSTALLED and PLUMBED).

Single Tank PRO Rack Machine and Booster Ratings

The tables below give the ratings for each model. The ratings include the requirements of the 21 kW booster heater.

Machines with a single point electrical connection:

66 PRO-FF-HR Electric, Tank Heat, 21 kW 70° Booster			
Elec. Specs	Rated Amps	Minimum Supply Ckt. Conductor Ampacity	Maximum Overcurrent Protective Device
208/60/3	116	150	150
240/60/3	101	150	150
480/60/3	50	70	70
575/60/3	42	60	60

Machines with a dual point electrical connection:

66 PRO-FF-HR Electric, 21 kW Booster Only			
Elec. Specs	Rated Amps	Minimum Supply Ckt. Conductor Ampacity	Maximum Overcurrent Protective Device
208/60/3	59	80	80
240/60/3	51	70	70
480/60/3	26	35	35
575/60/3	22	30	30

66 PRO-FF-HR Electric, Machine Only			
Elec. Specs	Rated Amps	Minimum Supply Ckt. Conductor Ampacity	Maximum Overcurrent Protective Device
208/60/3	58	80	80
240/60/3	50	70	70
480/60/3	25	35	35
575/60/3	21	30	30

Note:
Machine ships as a single point electrical connection standard.
Easily converted to a dual point connection by a qualified electrician.

In the USA: 3765 Champion Blvd, Winston-Salem, NC 27105 | Tel: (336) 661-1556 Fax: (336) 661-1979 | **www.championindustries.com**

In Canada: 2674 N. Service Rd., Jordan Station, Ontario, Canada LOR1S0 | Tel: (905) 562-4195 Fax: (905) 562-4618 | **www.championmoyerdiebel.ca**

Rev. 04/2026 Printed in U.S.A.

Due to an ongoing value analysis program at Champion, specifications contained in this catalog are subject to change without notice.

Champion®
The Dishwashing Machine Specialists

66 PRO-FF w/ Heat Recovery Electric

HIGH TEMPERATURE ELECTRIC RACK CONVEYOR

Shipping weight crated: 900 lbs. Dimensions shown in inches

Front View: Left to Right Model L-R

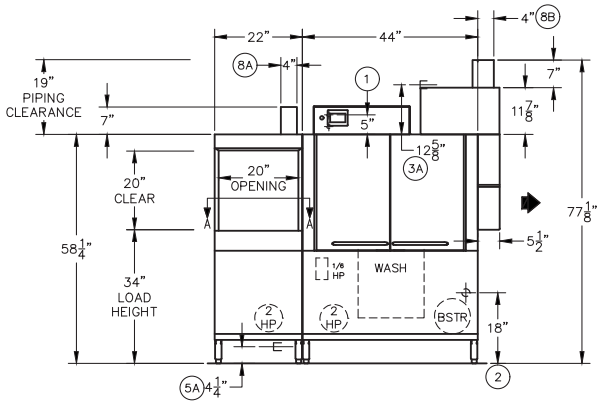

Front View: Right to Left Model R-L

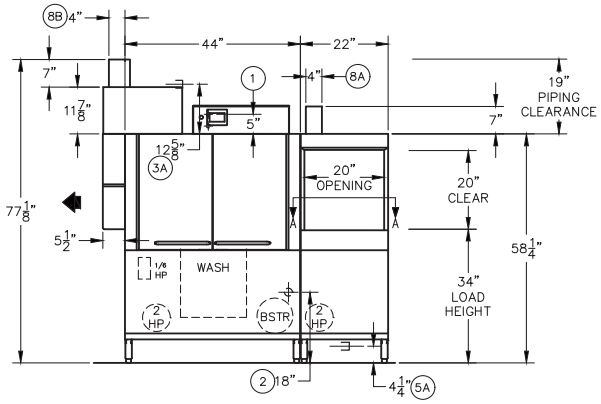

Plan View: Left to Right Model L-R

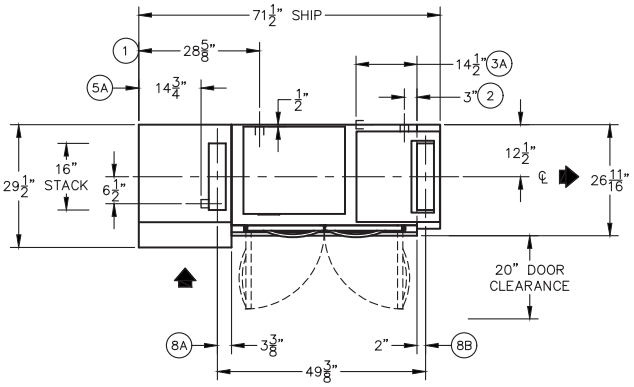

Plan View: Right to Left Model R-L

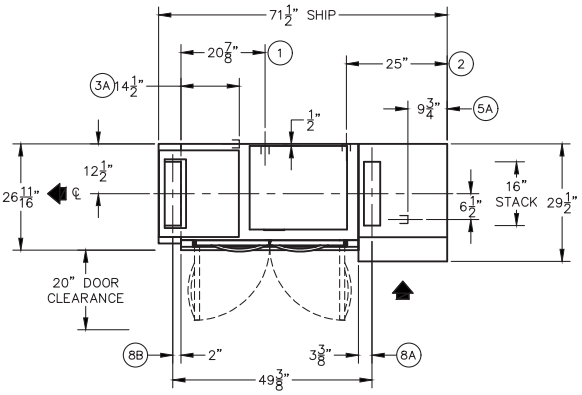

End View

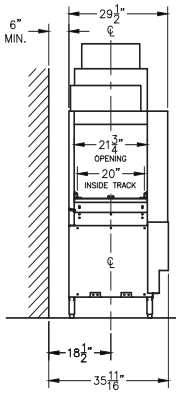

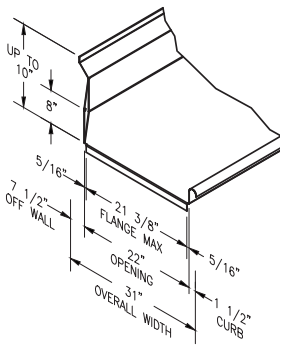

Suggested Table Construction

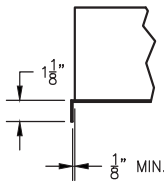

Flange Details

In the USA: 3765 Champion Blvd, Winston-Salem, NC 27105 | Tel: (336) 661-1556 Fax: (336) 661-1979 | **www.championindustries.com**

In Canada: 2674 N. Service Rd., Jordan Station, Ontario, Canada L0R1S0 | Tel: (905) 562-4195 Fax: (905) 562-4618 | **www.championmoyerdiebel.ca**

Rev. 04/2026 Printed in U.S.A.

Due to an ongoing value analysis program at Champion, specifications contained in this catalog are subject to change without notice.

WELBILT
an Ali Group Company

Champion®
The Dishwashing Machine Specialists

PROJECT: _____

ITEM # _____ QTY: _____

MODEL # _____

AIA # _____ SIS # _____

66 PRO-FF w/ Heat Recovery Steam

HIGH TEMPERATURE STEAM RACK CONVEYOR



Rendered image is for general visual representation only. Please refer to specifications for the latest detailed product information.

Customers save $1500 per year in energy cost on average when compared to a standard machine!

Certifications apply to the machine only.

STANDARD FEATURES

- **Exhaust Air Energy Recovery** reuses waste energy to preheat incoming water
- **44" Single Tank + 22" Prewash, Frontfeed**
- **Perpetual Rack Advance System** with digital jam monitoring, and mechanical drive protection
- **Automated Delime Function** with user-customizable alert intervals
- **209 Racks Per Hour**
- **0.48 Gallons/Rack With Energy Sentinel** (idle pump shut-off)
- **Advanced Touchscreen Display** intuitive condition alerts, with user friendly cleaning and operation visual guidance, multi-lingual
- **Enhanced Visual On-board Diagnostics** quickly identify machine faults for rapid resolution and less downtime
- **Automatic Tank Fill**
- **Programmable Machine Dwell** pauses rack in wash zone for extended cleaning, NSF Certified Pot & Pan Mode
- **Automatic Drain Valve**
- **Single-Piece Hood Design**
- **Single-Piece Scrap Screen** more robust and faster cleaning
- **Single-Piece Stainless Steel Upper And Lower Wash Arm Manifolds**
- **Single-Point Electrical Connection**
- **20" Standard Vertical Clearance** accommodates 18" x 26" sheet pans
- **Fully Insulated Doors** open a full 180° for unrestricted cleaning access
- **All Stainless Steel Heavy Gauge Construction** including base, legs and feet
- **Enclosure Panels** (front and sides)
- **2 HP Pump Motor** with stainless steel impeller
- **Factory Authorized Start-Up**
- **Vent Fan Control**
- **ENERGY STAR® Certified**

SPECIFIER STATEMENT

Specified unit will be Champion Model 66 PRO-FF w/Heat Recovery Option (steam) high temperature rack conveyor front feeding dishwashing machine. Features top mounted Prodigy HMI user interface controls with proactive maintenance software, proportional rinse, using only 100 GPH, built-in booster, progressive anti-jam drive system, energy sentinel (idle pump shut-off), 209 racks per hour, single-piece hood design, single-piece stainless steel upper & lower wash arms manifolds, full 180° opening leak proof insulated hinged access doors.

1 Year parts and labor warranty.

In the USA:
3765 Champion Blvd, Winston-Salem, NC 27105
Tel: (336) 661-1556 Fax: (336) 661-1979
www.championindustries.com

In Canada:
2674 N. Service Rd., Jordan Station, Ontario, Canada L0R1S0
Tel: (905) 562-4195 Fax: (905) 562-4618
www.championmoyerdiebel.ca

Rev. 04/2026 Printed in U.S.A.

APPROVAL: _____ DATE: _____

Champion®
The Dishwashing Machine Specialists

66 PRO-FF w/ Heat Recovery Steam

HIGH TEMPERATURE STEAM RACK CONVEYOR

ACCESSORIES

- ☐ Drain water tempering kit (unmounted)
- ☐ Table limit switch, unmounted (recommended on all rack conveyor installations) (unmounted)
  - o WHISKER STYLE
  - o BUTTON STYLE
- ☐ Vent cowl, stainless steel with 7" stacks & locking dampers
- ☐ Flanged feet (unmounted)
- ☐ Water hammer kit (unmounted)
- ☐ Chemical pump kit (detergent and rinse aid, mounted and interwired)
- ☐ Water pressure regulating valve (unmounted; standard with booster)
- ☐ Water softening system (manufactured, warrantied and serviced by Kinetico)
- ☐ Dish racks:
  - o PEG RACK
  - o FLAT RACK
- ☐ Model PRO-90B unloader (90° corner conveyor table)
- ☐ Model RCT 64 or RCT 84 roller conveyor table (see factory for custom length)
- ☐ Stainless steel rear enclosure panels
- ☐ Correctional package (contact factory)
- ☐ Lime Shield - Automated Booster Delime

OPTIONS

- ☐ 33" Blower dryer – steam
- ☐ Direct link connectivity solution
- ☐ Direct link plus+ connectivity solution

PRO-90B
90° Corner Conveyor table unloader available



Model RCT 64 or RCT 84
Roller conveyor table



In the USA: 3765 Champion Blvd, Winston-Salem, NC 27105 | Tel: (336) 661-1556 Fax: (336) 661-1979 | **www.championindustries.com**
In Canada: 2674 N. Service Rd., Jordan Station, Ontario, Canada L0R1S0 | Tel: (905) 562-4195 Fax: (905) 562-4618 | **www.championmoyerdiebel.ca**

Rev. 04/2026 Printed in U.S.A.

Due to an ongoing value analysis program at Champion, specifications contained in this catalog are subject to change without notice.

Champion®
The Dishwashing Machine Specialists

66 PRO-FF w/ Heat Recovery Steam

HIGH TEMPERATURE STEAM RACK CONVEYOR

UTILITIES

1	**Electrical Connections** Machine electrical connection and booster electrical connection
2	**Hot Water** 25 PSI flowing pressure (machine with built-in booster) Main connection 1/2" NPT, 110° incoming water (Initial Fill = 25 Gal)
3A	**Cold Water** 30 PSI flowing connection 1/2" NPT; 55° Minimum
5	**Drain** A Connection 1-1/4" NPT, Drain Max Flow Rate (g/min) 15 B Connection 3/4" booster water pressure relief valve to open drain
6A	**Steam** 1-1/4" NPT machine & booster (10-30 PSI) flow pressure
7A	**Condensate** 3/4" NPT machine return to boiler. **No back pressure.**
8	**Vents** A Stack connection – load end 150 CFM @ 1/4" static pressure B Stack connection – unload end 200 CFM @ 1/4" static pressure

Warning: Plumbing and electrical connections should be made by qualified personnel who will observe all the applicable plumbing, sanitary, and safety codes and the National Electrical Code.

Note: Water Hammer Arrestor (meeting ASSE-1010 standard or equivalent) to be supplied (by others) in common water supply line at service connection.

Plumbing Notes: Because of the variation in house-supplied steam and water pressures, steam and water pressure regulating valves (PRVs) may be needed. (Water PRV is standard on machines with booster.) The PRVs can either be purchased from Champion or obtained locally.

Champion does not endorse using on-demand (tankless) water heating systems, as well as PEX and other plumbing materials that may limit water flow, as these could impair machine performance. For optimal results, we recommend using appropriately sized conventional hot water tanks and standard copper water supply lines that adhere to our specifications. Not following these recommendations may void the manufacturer's warranty.

Water hardness of 3 grains/US Gal (0.83 Imp Gal) - 5.3 Mg/L or less

SPECIFICATIONS

Capacity	
Racks per hr (NSF rated)	209
Wash tank (US gal.)	17
Prewash tank (US gal.)	8
Conveyor speed (ft/min)	5.8
Conveyor speed Pot/Pan Mode (ft/min) (only one rack at a time in pot/pan)	4.5
Motor Horsepower	
Drive	1/6
Wash	2
Prewash	2
Water Consumption	
US Gal. per hr (max. use)	100
US Gal. per rack	0.48
Heating 10-30 PSI flow pressure	
Tank heat, steam (lbs./hr. required)	75
Steam booster (lbs./hr. required for 70° F rise)	110
Booster heaters completely inter plumbed, controls are interwired.	
Venting	
Load end (minimum CFM)	150
Unload end (minimum CFM)	200
Standard 20"x 20" Rack Complement	
Peg	1
Flat	1

Venting Notes: Fabricated duct size: 3-7/8" x 15-7/8" (outside dimensions)

Note: Freezing air must not be allowed to be drawn down into the heat recovery coil when building vent fan is off if direct vent ducting is connected to the machine.

Optional Drain Tempering: 1/2" NPT cold water connection required. 1/2" NPT drain connection from back flow preventer to house drain. (FIELD INSTALLED and PLUMBED).

66 PRO-FF w/Heat Recovery Option (Steam) Tank Heat, with 70°F Rise Booster

Elec. Specs	Rated Amps	Minimum Supply Ckt. Conductor Ampacity	Maximum Overcurrent Protective Device
208/60/3	16	20	20
240/60/3	15	20	20
480/60/3	7	15	15
575/60/3	6	15	15

In the USA: 3765 Champion Blvd, Winston-Salem, NC 27105 | Tel: (336) 661-1556 Fax: (336) 661-1979 | **www.championindustries.com**

In Canada: 2674 N. Service Rd., Jordan Station, Ontario, Canada L0R1S0 | Tel: (905) 562-4195 Fax: (905) 562-4618 | **www.championmoyerdiebel.ca**

Rev. 04/2026 Printed in U.S.A.

Due to an ongoing value analysis program at Champion, specifications contained in this catalog are subject to change without notice.

Champion®
The Dishwashing Machine Specialists

66 PRO-FF w/ Heat Recovery Steam

HIGH TEMPERATURE STEAM RACK CONVEYOR

Shipping weight crated: 900 lbs. Dimensions shown in inches

Front View: Left to Right Model L-R

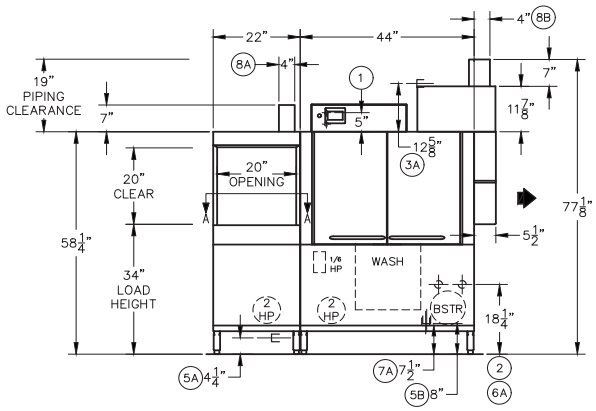

Front View: Right to Left Model R-L

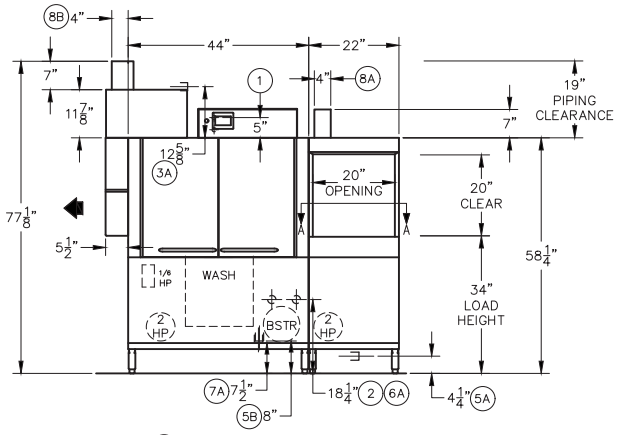

Plan View: Left to Right Model L-R

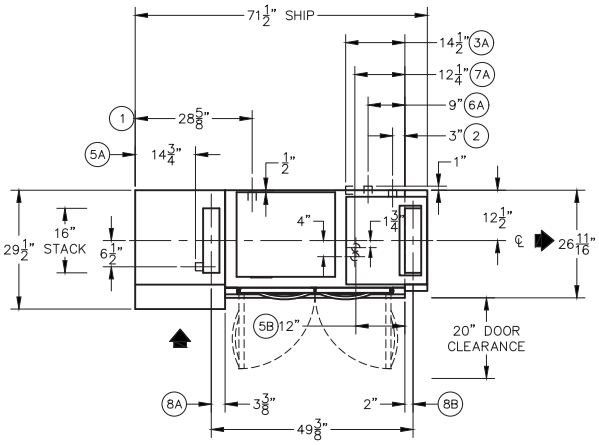

Plan View: Right to Left Model R-L

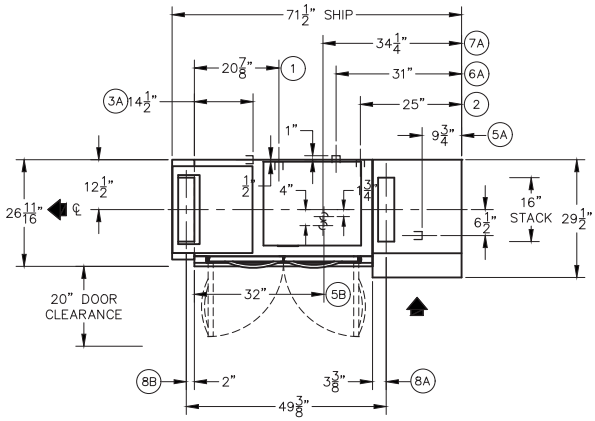

End View

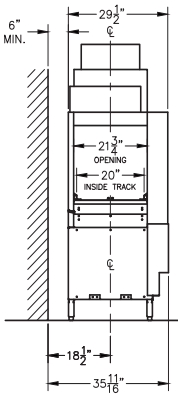

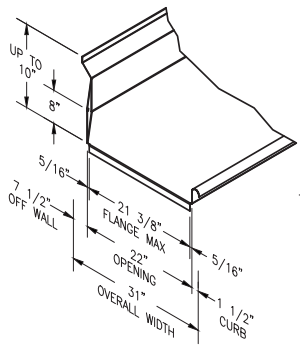

Suggested Table Construction

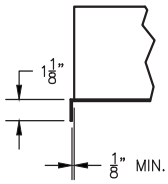

Flange Details

In the USA: 3765 Champion Blvd, Winston-Salem, NC 27105 | Tel: (336) 661-1556 Fax: (336) 661-1979 | **www.championindustries.com**

In Canada: 2674 N. Service Rd., Jordan Station, Ontario, Canada L0R1S0 | Tel: (905) 562-4195 Fax: (905) 562-4618 | **www.championmoyerdiebel.ca**

Rev. 04/2026 Printed in U.S.A.

Due to an ongoing value analysis program at Champion, specifications contained in this catalog are subject to change without notice.

WELBILT
an Ali Group Company