STAINLESS STEEL

COUNTERTOP INSTALLED HAND SINKS

WITH BUILT-IN PAPER TOWEL DISPENSER & DECK MOUNTED SOAP DISPENSER

Conforms To NSF 61/9 Lead Free Requirements



7-PS-42 Shown



7-PS-43 Shown



7-PS-43 Shown Above Installed in a Work Table

Item #: _____ **Qty #:** _____

Model #: _____

Project #: _____

FEATURES:

One piece **Deep Drawn** sink bowl design.

Sink bowls have a large liberal radii with a minimum dimension of 2" and are rectangular in design for increased capacity.

Both units include Deck Mounted Liquid Soap Dispenser & Stainless steel basket drain 1-1/2" IPS.

Specific Features:

Undermount towel dispenser pivots forward for ease of reloading.

Standard "C" Fold towels extracted directly from front of towel dispenser.

7-PS-42 & 7-PS-42A includes K-52 deck mounted, 4" O.C. chrome plated faucet & furnished with aerator.

7-PS-43 includes Knee-Valve operation & Gooseneck Spout.

CONSTRUCTION:

All TIG welded.

Welded areas blended to match adjacent surfaces and to a satin finish.

Die formed Countertop Edge with a No-Drip offset.

One sheet of stainless steel - No Seams.

MATERIAL:

Heavy gauge type 304 series stainless steel.

All fittings are brass / chrome plated unless otherwise indicated.

MECHANICAL:

Faucet supply is 1/2" IPS male thread hot and cold.

Faucet Flow Rate: 1.0 GPM/3.8 LPM aerator. 60 PSI.

For Factory Installation – Add TA-503

Model #	Overall Size W x L	Bowl Size W x L x D	Approx. Weight	Approx. Cu. Ft.
7-PS-42	17-5/8" x 18-1/4"	10" x 14" x 5"	30 lbs.	2
7-PS-42A	17-3/8" x 13"	9" x 9" x 5"	26 lbs.	2
7-PS-43	17-5/8" x 18-1/4"	10" x 14" x 5"	36 lbs.	2

⚠ WARNING:

Equipment that includes a faucet may expose you to chemicals, including lead, that are known to the State of California to cause cancer or birth defects or other reproductive harm. For more Info.,visit www.p65warnings.ca.gov.

ADVANCE TABCO SMART FABRICATION™
www.advancetabco.com

Customer Service Available To Assist You 1-800-645-3166 8:30 am - 7:00 pm E.S.T.

For Orders & Customer Service:
Email: customer@advancetabco.com or Fax: 631-242-6900

For Smart Fabrication™ Quotes:
Email: smartfab@advancetabco.com or Fax: 631-586-2933

DIMENSIONS and SPECIFICATIONS

TOL Overall: ± .500" Interior: ± .250" **FITTINGS SUPPLIED AS SHOWN** **ALL DIMENSIONS ARE TYPICAL**

7-PS-42

Countertop Opening Not to Exceed
17 1/4" (Front to Back) x 17 3/8" (Left to Right)

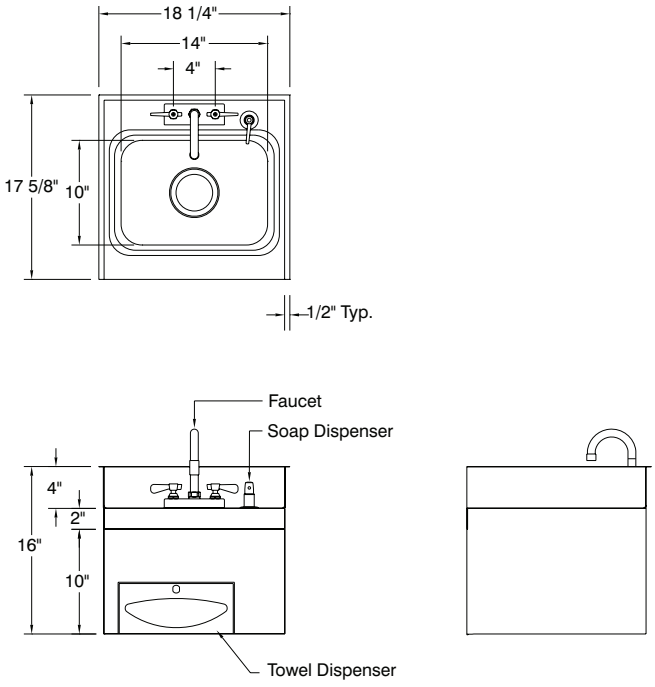

Approx. Ship Wt. 33 lbs.

7-PS-42A

Countertop Opening Not to Exceed
16 7/8" (Front to Back) x 12 1/8" (Left to Right)

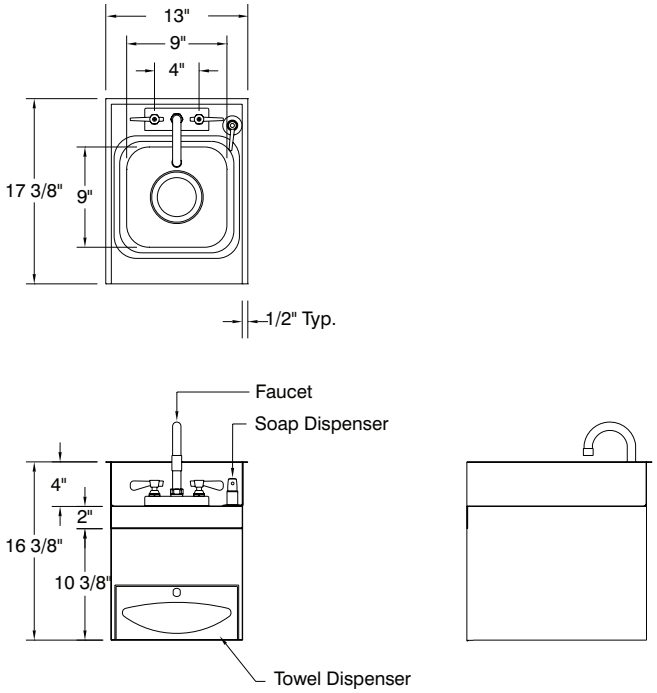

Approx. Ship Wt. 30 lbs.

7-PS-43

Countertop Opening Not to Exceed
17 1/4" (Front to Back) x 17 3/8" (Left to Right)

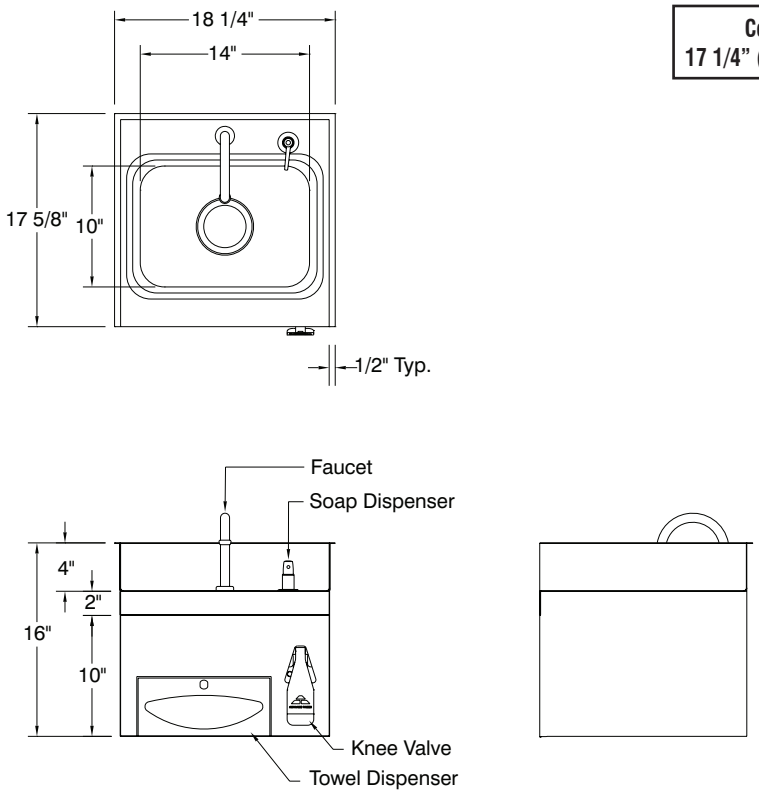

Approx. Ship Wt. 36 lbs.

ADVANCE TABCO
SMART FABRICATION™

325 Wireless Boulevard, Hauppauge, NY 11788

REF-B

ADVANCE TABCO is constantly engaged in a program of improving our products. Therefore, we reserve the right to change specifications without prior notice.

© ADVANCE TABCO, OCTOBER 2026