RLRB SERIES RADIANT BROILER



WELDED #304 STAINLESS STEEL
For easy cleaning and long life

REMOVABLE FIRE BOX
For easy cleaning and maintenance

EXTENDED BURNERS -18" LENGTH
For better heat distribution

AVAILABLE OPTIONS:

- 1/2" Steel Rolling Rod Grates
- Floor Model Accessory

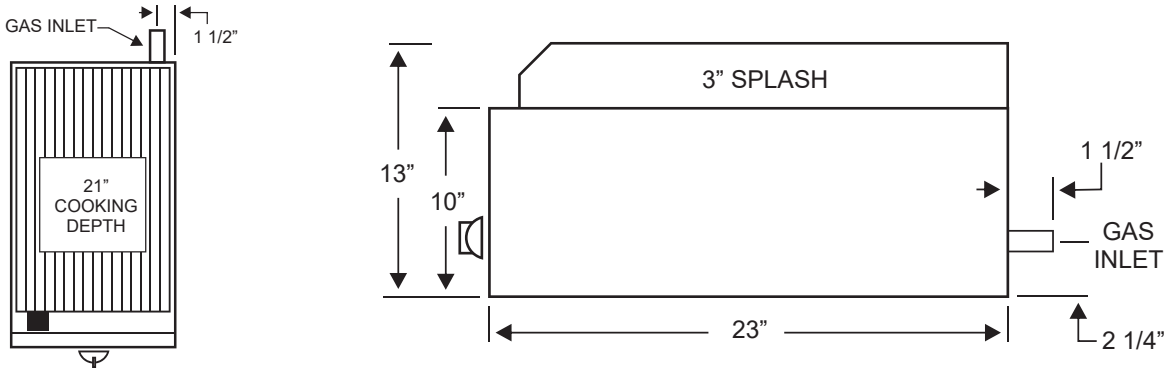

MODEL	WIDTH	DEPTH	BTU	BURNERS	WT. (EST)*	WT. (EST)*
RLRB-23-12R	12"	23"	28,000	1	65	85
RLRB-23-17R	17"	23"	28,000	1	80	100
RLRB-23-22R	22"	23"	56,000	2	110	130
RLRB-23-27R	27"	23"	56,000	2	125	145
RLRB-23-32R	32"	23"	84,000	3	155	180
RLRB-23-37R	37"	23"	84,000	3	175	200
RLRB-23-42R	42"	23"	112,000	4	195	225
RLRB-23-47R	47"	23"	112,000	4	215	245
RLRB-23-52R	52"	23"	140,000	5	245	280

PRODUCT SPECIFICATIONS:

BODY
18 Gauge #304 Stainless Steel, Fully Welded

FIRE BOX 16 Gauge #304 Stainless Steel, Fully Welded

FRONT
Removable 18 Gauge #304 Stainless Steel Panel

TOP GRATES
Heavy Duty Cast Iron w/Adjustable Rear Height

RADIANTS
12 Gauge Stainless Steel

BURNERS
28,000 BTU Cast Iron, H Burner short

DRIP PAN
18 Gauge #304 Stainless Steel

VALVES
Heavy Duty Brass

GAS INLET
¾ NPT

GAS PRESSURE
4.0" Natural, 10.0" Propane (Inches Water Column)

LEGS (FLOOR MODEL)
#304 Stainless Steel tubing with bullet, Casters or seismic options

NOTES:

Gas Pressure Regulator is supplied and must be installed Non-Combustible Locations Only:

- 0" Clearance sides and back
- Specify counter or floor model
- Specify type of gas and altitude if over 2,000 feet

Connerton reserves the right, without notice, to make changes and revisions in product specifications, materials and design, which in our opinion will provide better performance, durability and efficiency.