SIE320AIHER5HP3P

126" Meat Saw



The Meat Gear Band Saw Blade Machine 126 is a robust, stainless steel industrial saw designed for high-efficiency meat and bone processing. Featuring a 5 HP totally enclosed motor and an open-frame, sanitary-friendly construction, it ensures durability, safety, and precision in demanding work environments. With a blade speed of 69 ft/sec and semi-automatic tension control, it delivers reliable performance with minimal maintenance.

STANDARD FEATURES

- 5 HP Motor, totally enclosed with thermal protection - 220V - 3-phase
- Hose Down Washable
- Open-Frame stainless steel construction with removable double-flanged pulleys
- Upper and lower carbide-insert web guides for extended life
- Semi-Automatic and easy adjustable blade tension
- Hinged and interlock upper door for safety
- Accessible blade guards above and below the cutting zone
- Removable scrap tray for easy cleaning
- 8 Wheel Carriage for extra weight and easy displacement
- Fully sealed electrical system.
- Product pusher
- 4 adjustable legs up to 3"
- Ramp for product launch into Meat Lug
- Stainless steel meat pusher included



Semi Automatic Blade Tension

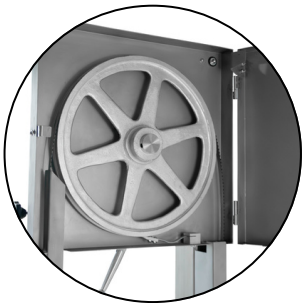

Safety interlock Switches

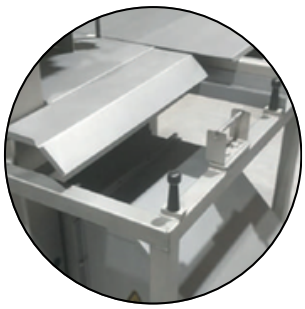

Product Launch Ramp

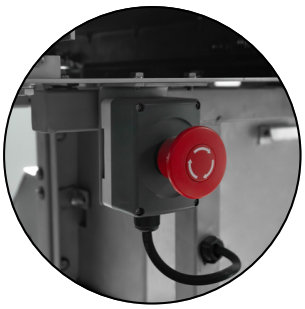

Emergency Stop Button

SIE320AIHER5HP3P

126" Meat Saw

Details and Dimensions

Cutting Table Dimensions:

- **A** Sliding Carriage: 17.5" x 20.5"

Cutting Clearance: D x W x L

- 13.75" x 20" x 20.5"

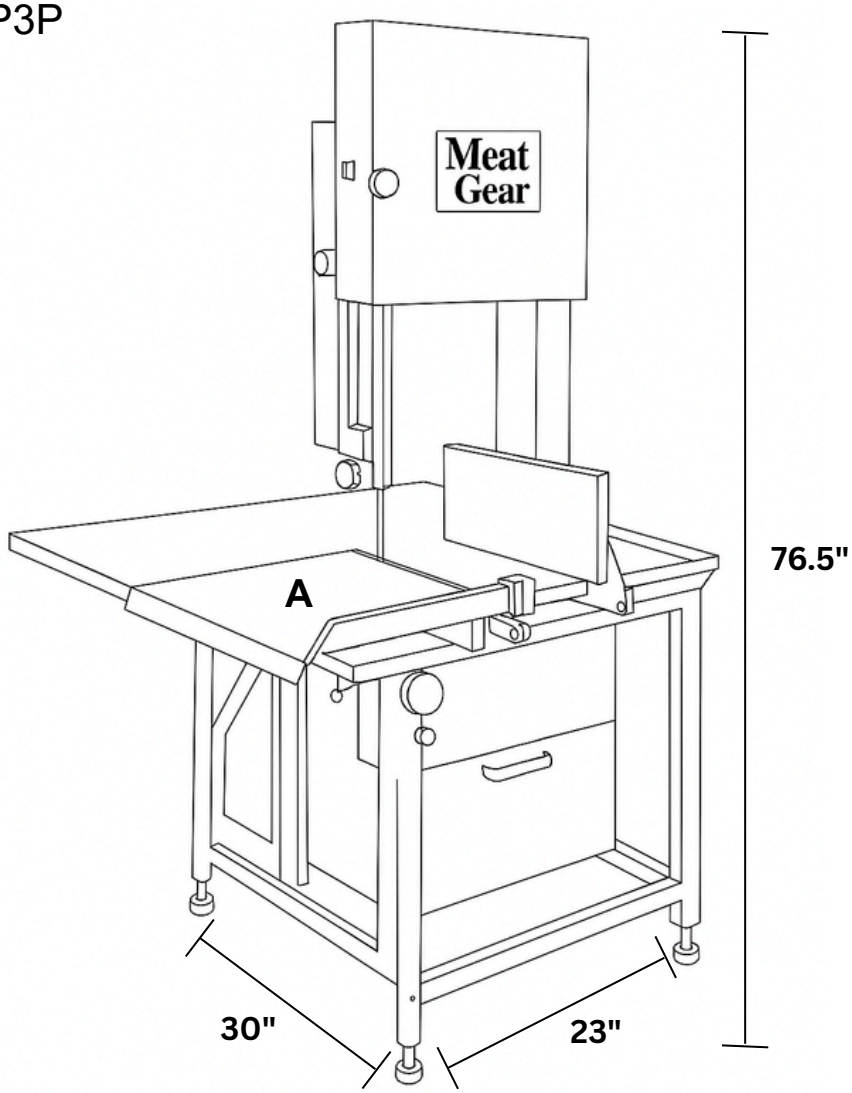

Technical Specifications

Electrical: 220 Volts, 60 Hz and Three Phase

Motor: 5 HP Motor

Blade Length: 126"

Transmission: Direct Gear Driven

On / Off: Located in the upper part of the Meat Saw.

Cord & Plug: A 9 foot flexible 3-wire cord.

Finish: Open frame full stainless steel design.

Warranty: Meat Gear 1-Year Warranty, Parts and Labor.

Weight:
Unit Net: 517 lb
Shipping : 655 lb

Dimensions: L x W x D
Unit:
Shipping: 41" x 33" x 85"

Attributes - Advantages

Performance:

- 69 ft/sec blade speed

Ease of Operation:

- Easy tool removal - no tools required
- Accessible and semi automatic blade tension for easy adjustment.
- 2-piece table for easy cleaning.

Smart Control / Safety

- Sealed magnetic on/off switch with protective overload.
- Emergency stop button.
- Safety interlock switch, machine will not start and will shut down once door opens..