Two Compartment - No Drainboards

Stainless Steel Compartment Sinks

Use your smart phone to scan the above QR code to visit our website: www.bk-resources.com

Certifications:

NSF





Shown as:
Model #s ending in S

Features:

- 1 1/2" Rounded Front and Side Edges
- Accommodates 8" On Center Faucets
- Drains Included
- 9" Backsplash

Options:

- Pre-Rinse Units & Faucets
- Lever Drains
- Upgraded Bullet Feet
- Slant Rack Shelf (BK-SSH)
- End Splash (BKS-RES)
- S/S Basket Drain (BKDR-4-304)

Material:

- T-304 18 ga. Stainless Steel Deck & Bowls
- $1^{5/8}$" Galvanized Legs
- Adjustable High Impact Corrosion Resistant Feet

Model #s ending with "S":

- T-304 18 ga. Stainless Steel Deck & Bowls
- Stainless Steel Legs
- Stainless Steel End Bracing
- Adjustable Stainless Steel over Plastic Bullet Feet

PRODUCT DATA SHEET

Part Number	Unit Size (l x w)	Bowl Dim. (l x w x d)	Sets of Faucet Holes	Drainboard Size	Legs	Product Overall Height	Product Working Height	Product Weight (lbs)
BKS-2-1620-12	37" x 25 13/16"	16" x 20" x 12"	1	None	Galvanized	43 ¾"	36"	51.00
BKS-2-1620-12S	37" x 25 13/16"	16" x 20" x 12"	1	None	Stainless Steel w/ End Bracing	43 ¾"	36"	60.00
BKS-2-18-12	41" x 23 13/16"	18" x 18" x 12"	1	None	Galvanized	43 ¾"	36"	51.00
BKS-2-18-12S	41" x 23 13/16"	18" x 18" x 12"	1	None	Stainless Steel w/ End Bracing	43 ¾"	36"	60.00
BKS-2-24-14	53" x 29 13/16"	24" x 24" x 14"	1	None	Galvanized	43 ¾"	36"	74.00
BKS-2-24-14S	53" x 29 13/16"	24" x 24" x 14"	1	None	Stainless Steel w/ End Bracing	43 ¾"	36"	86.00

© BK Resources November 2026

Two Compartment - No Drainboards

Stainless Steel Compartment Sinks

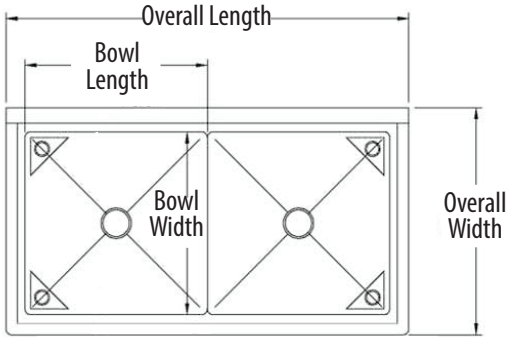

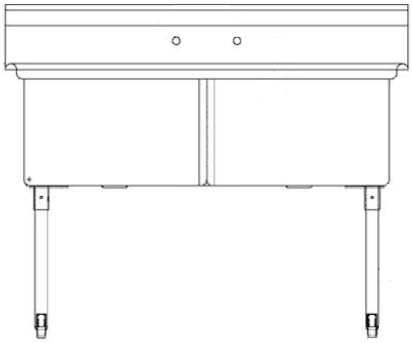

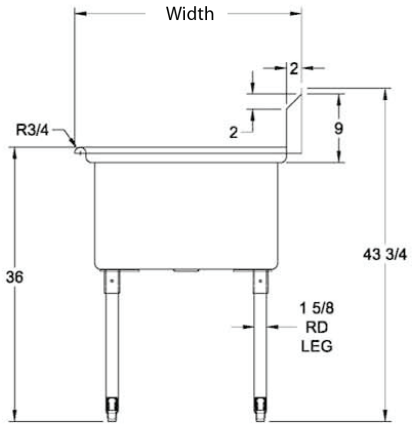

PRODUCT DATA SHEET