Toastmaster®

HOT FOOD SERVERS

FREE STANDING MODELS

3A81D
3B82D, 3B84D
3C84D, 3D8XD

BUILT-IN MODELS

3A20A, 3A80A
3B20A, 3B80A,3B84A
3C80A, 3C84A

Installation and Operation Instructions

2M-3102301, Rev. F, (06-26)

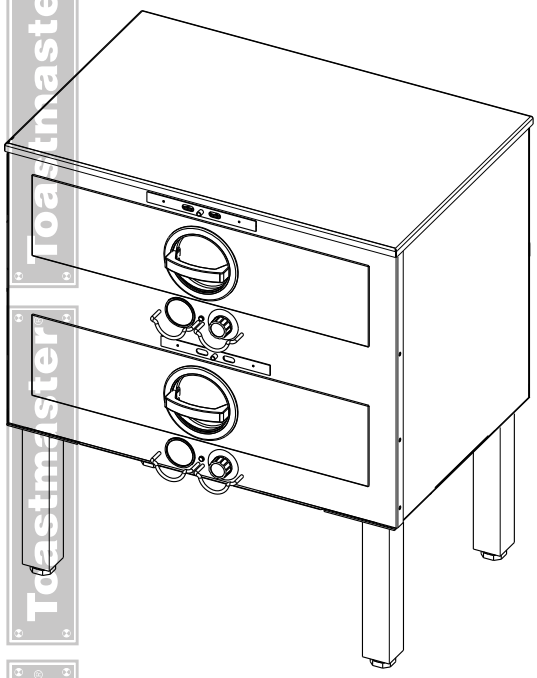

3B84D

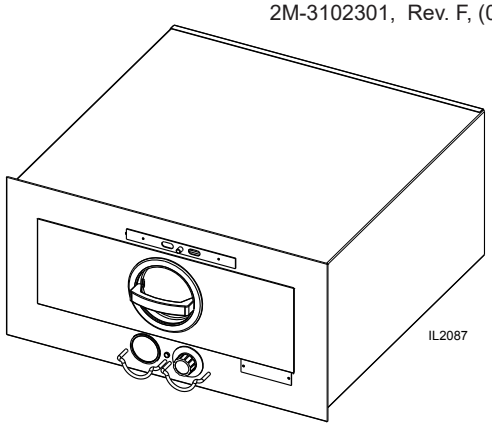

3A20A

SAFETY SYMBOLS



These symbols are intended to alert the user to the presence of important operating and maintenance instructions in the manual accompanying the appliance.



RETAIN THIS MANUAL FOR FUTURE REFERENCE

NOTICE

Using any part other than genuine Toastmaster factory supplied parts relieves the manufacturer of all liability.

Toastmaster reserves the right to change specifications and product design without notice. Such revisions do not entitle the buyer to corresponding changes, improvements, additions or replacements for previously purchased equipment.

Due to periodic changes in designs, methods, procedures, policies and regulations, the specifications contained in this sheet are subject to change without notice. While Toastmaster exercises good faith efforts to provide information that is accurate, we are not responsible for errors or omissions in information provided or conclusions reached as a result of using the specifications. By using the information provided, the user assumes all risks in connection with such use.

MAINTENANCE AND REPAIRS

Contact your local authorized service agent for service or required maintenance. Please record the model number, serial number, voltage and purchase date in the area below and have it ready when you call to ensure a faster service.

Model No. _____

Serial No. _____

Voltage _____

Purchase Date _____

Authorized Service Agent Listing

Reference the listing provided with the unit

or

for an updated listing go to:

Website: www.star-mfg.com
E-mail customerservice@star-mfg.com
Telephone: (800) 264-7827

The Service Help Desk

Business Hours: 8:00 am to 4:30 p.m. Central Standard Time

Telephone: (800) 264-7827

Fax:

E-mail customerservice@star-mfg.com

Website: www.star-mfg.com

Mailing Address: **STAR MANUFACTURING INTERNATIONAL INC.**
265 Hobson Street
Smithville, TN 37166
U.S.A

TABLE OF CONTENTS

Page

Electrical Specifications 1
Specifications 2
Features & Descriptions 3
Accessories 4
Installation
- Inspection for Shipping Damage 4
- Unpacking 4
- Installation of Free-Standing Models 5
- Installation of Built-In Units 6
- Initial Start-up 7

Operation
- Location of Controls 8
- Function of Controls 8
- Operation 8
- Shutdown 9
- Pre-heating 9
- Capacity Per Pan 9
- Recommended Temp & Humidity Setting 10
- Daily Cleaning 10-11
- Clean & Lubricate 11

Warranty 13
Exploded View & Parts List
- Single Drawer Units 14-16
- Two, Three & Four Drawer, Single Controls 18-21
- Two, Three & Four Drawer, Individual Controls 22-24

ELECTRICAL SPECIFICATIONS

ELECTRICAL SPECIFICATIONS						
Model No		Voltage	Watts	Phasee	Hz	Power Cord
7C-3A20AT09-120	3A20A	120	.45 KW	1	50/60	
7C-3A80AT09-120	3A80A	120	.45 KW	1	50/60	
7C-3A80AT72-240	3A80A	240	.4/.54 KW	1	50/60	
7C-3A80AWC-120V	3A80A	120	.45 KW	1	50/60	5-15P
7C-3A81D-120KFC	3A81D-KFC	120	.45 KW	1	50/60	
7C-3A81DT09-120	3A81D	120	.45 KW	1	50/60	
7C-3A81DT72-240	3A81D	208/240	.45/.54 KW	1	50/60	
7C-3B20AT09-120	3B20A	120	1.0 KW	1	50/60	
7C-3B20AT72-240	3B20A	208/240	.9/1.2 KW	1	50/60	
7C-3B80AT09-120	3B80A	120	1.0 KW	1	50/60	
7C-3B80AT72-240	3B80A	208/240	.9/1.2 KW	1	50/60	
7C-3B80AWC-120V	3B80A	120	1.0 KW	1	50/60	5-15P
7C-3B82DT09-CFA	3D82D	120V	1.0KW	1	50/60	5-15P
7C-3B84AT09-120	3B84A	120	.9 KW	1	50/60	
7C-3B84AT72-240 / -SA	3B84A	208/240	.85/.98 KW	1	50/60	
7C-3B84DT09-120	3B84D	120	.9 KW	1	50/60	
7C-3B84DT09-KFC	3B84D-KFC	120	.9 KW	1	50/60	
7C-3B84DT72-240	3B84D	208/240	.85/.98 KW	1	50/60	
7C-3C80AT09-120	3C80A	120	1.35 KW	1	50/60	
7C-3C80AT72-240	3C80A	208/240	1.22/1.6 KW	1	50/60	
7C-3C84AT09-120	3C84A	120V				
7C-3C84AT72-240	3C84D	208/240	1.28/1.47 KW	1	50/60	
7C-3C84DT09-120	3C84D	120	1.35 KW	1	50/60	
7C-3C84DT72-240	3B84D	208/240	.85/.98 KW	1	50/60	
7C-3D8XDT09-120	3D8XD	120	1.35 KW	1	50/60	
7C-3D8XDT72-240	3D8XD	208/240	1.22/1.6 KW	1	50/60	

SPECIFICATIONS

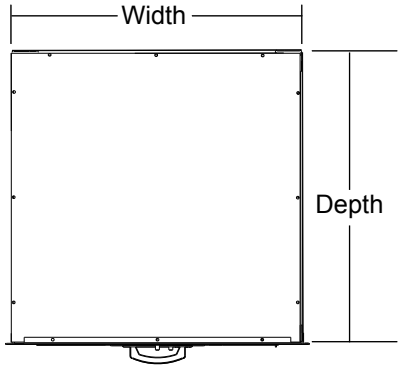

Top View

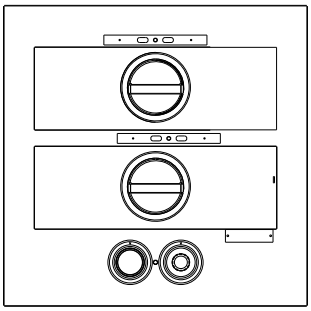

Front View

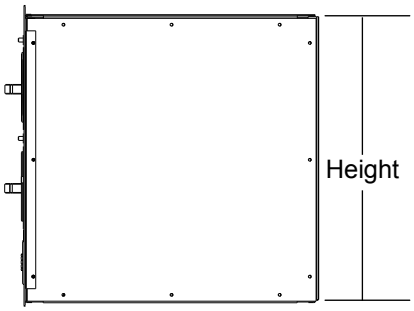

IL2088

Side View

MODEL CHART

Model	Built-In / Free Standing	Drawers	Individual Drawer Control	Preheat Times (minutes)		Dimensions			Weight	
				150°F (65°C)	175°F (79°C)	"W"	"D"	"H" w/o legs	Installed	Shipped
3A81D	Free Standing	1	YES	18.8	26.2	29 1/16	20 3/8	11	84 lbs	94 lbs
3A20D		1	YES	18.8	26.2	24 1/16	22 9/16	12 1/4	84 lbs	94 lbs
3A21D		1	YES	18.8	26.2	24 1/16	22 9/16	12 1/4	84 lbs	94 lbs
3B22D		2	NO	17.2	24.8	23 1/16	24 1/4	22 1/8	129 lbs	144 lbs
3B82D		2	NO	18.8	26.2	29 1/16	20 5/16	21 1/8	120 lbs	139 lbs
3B84D		2	YES	18.8	26.2	29 1/8	20 7/16	21 5/8	120 lbs	139 lbs
3C8XD		3	NO	20.6	28.2	29 1/16	20 5/16	28 3/4	201 lbs	229 lbs
3C84D		3	YES	18.8	26.2	29 1/8	20 7/16	32 5/16	201 lbs	229 lbs
3D8XD		4	NO	22.3	29.7	29 1/16	20 5/8	36 5/16	237 lbs	252 lbs
						Body Dimensions				
3A20A	Built-In	1	YES	18.8	25.8	23 1/16	23	11 1/4	70 lbs	82 lbs
3A80A		1	YES	18.8	26.2	29 1/16	19 1/8	11	72 lbs	84 lbs
3B20A		2	NO	17.2	21.8	23 1/16	23	22 1/2	120 lbs	138 lbs
3B80A		2	NO	18.8	26.2	29 1/16	19 1/4	21 1/2	125 lbs	144 lbs
3B84A		2	YES	18.8	26.2	29 1/16	19 1/4	21 3/4	125 lbs	144 lbs
3C80A		3	NO	20.6	28.2	29 1/16	19 1/4	29 5/16	171 lbs	186 lbs
3C84A		3	YES	18.8	26.2	29 1/16	19 1/4	32 1/2	206 lbs	228 lbs

FEATURES & DESCRIPTIONS

COMPONENT LOCATION & FUNCTION

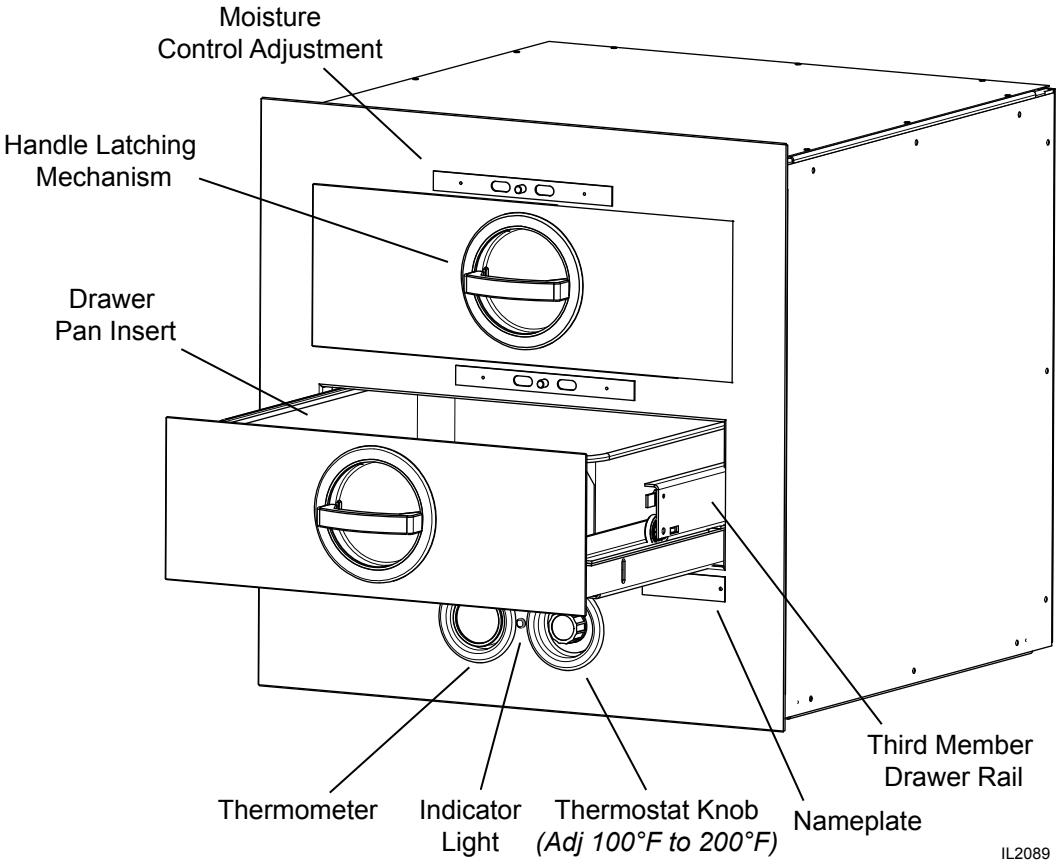

Toastmaster Hot Food Servers are heated drawer-type cabinets designed to HOLD food cooked in advance at serving temperature and proper moisture content.

Thermostat: The thermostat is graduated from 0 to 10 which makes is adjustable from 100°F to 200°F **(38°C to 93°C)** holding temperature. Some models are equipped with separate thermostat for each drawer. Refer to Specifications on the previous page.

Thermometer: The thermometer is used to visually check if the holding temperature is at the desired setting. Chicken, beef, ribs, fish, potatoes, vegetables and sauces can be held at temperatures with confidence because you can see that the actual holding temperature is safe. The thermometer will tell at a glace if the holding temperature is high enough to retard dangerous bacteria growth and low enough to prevent overcooking and drying out food.

Note: On models with one drawer and on models with individual temperature controls for each drawer the thermostat knob and thermometer are protected with either a wire guard, or the are recessed into the front panel.

Moisture Control: The moisture control consist of a slide which is used to control the amount of moisture allowed to escape form the foods being held.

Indicator Light: The light will illuminate when the unit is calling for heat and will shut off when it has reached the set temperature.

DESCRIPTION continued

Accessories	
3 & 4 Drawer Free Standing Models:	
7C-3L6	Square legs 6” high, stainless steel, set of 4, leveling adj. up to 3/4”
7C-3L9	Square legs 9” high, stainless steel, set of 4, leveling adj. up to 3/4”
7C-3L12	Square legs 12” high, stainless steel, set of 4, leveling adj. up to 3/4”
7C-3L15	Square legs 15” high, stainless steel, set of 4, leveling adj. up to 3/4”
7C-3M3	Casters, 3”, set of four (swivel without brakes) adds 4-1/4” to unit height
7C-3M4	Casters, 3”, set of four (two swivel/lock, two fixed), adds 4-1/4” to unit height
2 Drawer Free Standing Models:	
7C-3M338STSB	Casters, 3” set of four swivel (two with brakes), 360lbs. Load capacity

INSTALLATION



INSTALLATION

A. Inspect for Shipping Damage

All shipping containers should be examined for damage before and during unloading. This equipment was carefully inspected and packaged at the factory. The freight carrier has assumed responsibility for its safe transit and delivery. If equipment is received in damage condition, either apparent of concealed, a claim must be made with the delivery carrier.

1. Apparent Damage or Loss - If damage or loss is apparent it must be noted on the freight bill or express receipt at the time of delivery, and it must be signed by the carrier’s agent (driver). If this is not done, the carrier may refuse the claim. The carrier will supply the necessary claim forms.
2. Concealed Damage or Loss - If damage or loss is NOT apparent until after equipment is unpacked, a request for inspection of concealed damage must be made with carrier within 15 days. The carrier will make an inspection and will supply necessary claim forms. Be certain to retain all contents plus external and internal packaging materials for inspection.

B. Unpacking Hot Food Server

1. Open carton and remove it from around hot food server, then remove the empty carton from the area.
2. Remove all tape from unit and set food server on its side on three 2x4’s (as shown in Figure 2-1) so the packing skid attached to the bottom of the unit is off the ground.

WARNING: DO NOT set the unit on its back, damage could be occur to the power cord or conduit. Place unit on its side.

3. Remove 4 bolts attaching skid to bottom of unit.

C. Installation of Free-Standing Models

1. **Counter top Models 3B22D, 3A81D, 3A20D, 3A21D , 3B82D AND 3B84D**.
   a. Countertop models are shipped with a set of four 4"(102mm) adjustable legs or an optional set of 4 casters *(see Accessories Chart on previous page)* can be ordered. Screw the legs or casters into the threaded holes in the corners of the unit bottom.
   b. Hot food servers with legs can be set on the floor or on the counter. Units with casters can only be set on the floor. **Do not set the hot food server with casters on a counter top.**
   c. Level unit with legs by turning the hexagonal adjustment feet located at the bottom of the legs.
2. **Floor Models 3B82DT, 3C8XD, 3C84D AND 3D8XD** are usually installed as floor models due to their size. One of the available leg or caster accessory kits must be used in the installation.
   a. **Leg Installation** using accessory kit (see chart for available leg or caster accessories, sold separately)

      Locate and open the accessory leg kit and the hardware package included with it.

      With the hot food server on it side and the 2x4's still positioned under the unit, align the square corner of a leg flange with a corner of the unit. Attach the leg flange using 5 of the bolts furnished. Refer to figure 2-2.

      Repeat for remaining three legs.

      Carefully set unit upright, using a level, level the server by turning the adjustable feet.
   b. **Caster Installation** using accessory kit *(see chart for available leg or caster accessories, sold separately)*

      The casters kits are installed the same as the leg kits above, except 2 of the casters are fixed and should be installed at one end or at the rear. The other 2 swivel casters with brakes are installed opposite the fixed casters.

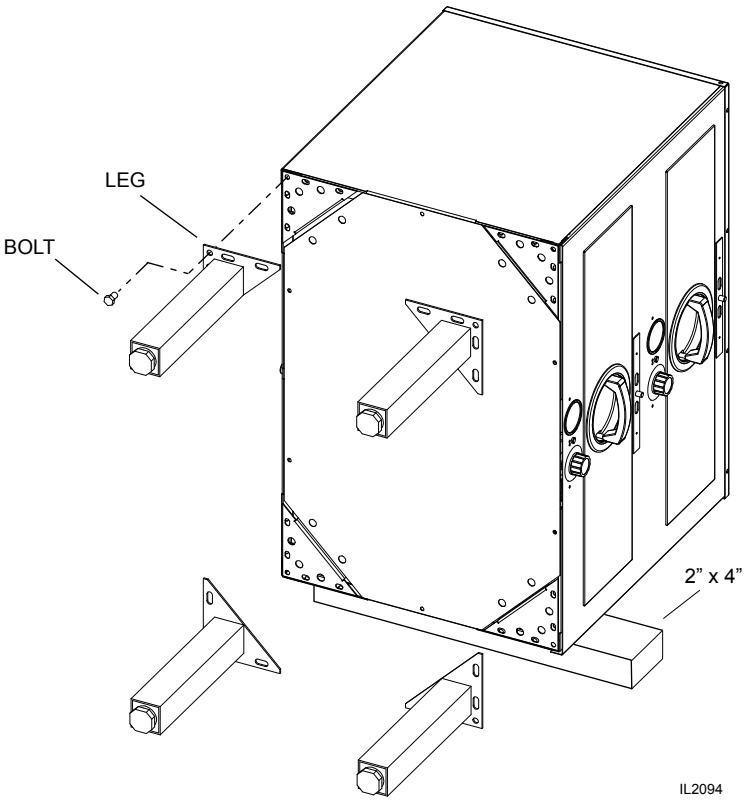

Fig. 2-1, Leg / Caster Installation

3. **Electrical Connections:**

   FREE STANDING UNITS: All free standing hot food servers are quipped with a factory installed 36" (914mm) cord and plug.

   • 120V models: Plug conforms to NEMA Standard 5-15P
   • 208/240V models: Plug conforms to NEMA Standard 6-15P

   BUILT-IN UNITS: Most units are provided with a 48" flexible metal conduit for electrical connections (see electrical specifications for specifics).

D. Installation of Built-In Units:

All of these units are true built-in models and are designed to be installed into the front face of a counter fixture. Front of units extends beyond the body to form a self-trimming flange that covers the cut out in the fixture.

1. **Cabinet Cut Out and Support.** Cut out the face of the counter fixture according to the drawing that is provided with your hot food server. Figure 2-5 can also be used for the cut out drawing of your model number. As shown in the drawing allow 1/2" (13mm) minimum cabinet face material above top of cut out opening. This allows unobstructed seating of hot food server flange.

   Be sure counter fixture has adequate depth from front face to inside of back to accept the hot food server. Minimum depths are shown for each model in Figure 2-5.

   a. The hot food server body must be supported from the bottom. This can be accomplished by installing metal support angles of wooden support blocks as shown in Figure 2-5. The supports are not supplied and must be furnished using a suitable strength metal or wood. The top surface of these supports must be 1/16" (3mm) below the bottom edge of the face cut out. A metal or wood crossbrace approximately 2-1/2" (64mm) wide should be securely mounted between the supports as shown. The center line of the crossbrace must be 4" (102mm) from the face of the cut out and its top surface must be flush with the side supports.

   b. An alternate support method is to install a solid flat platform in lieu of the side supports and crossbrace. The top surface of the platform must be 1/16" (3mm) below the bottom edge of the cut out.

2. Install Leveling Feet (shown below). Open the top drawer and remove the small cloth bag containing four hex head cap screws & two mounting screws. Thread these four screws hand tight up into the four holes in the bottom of the unit. Refer to 2-6.

Right: Leveling Feet for Built-in Units. (pn: 2C-1513D8805)

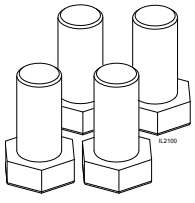

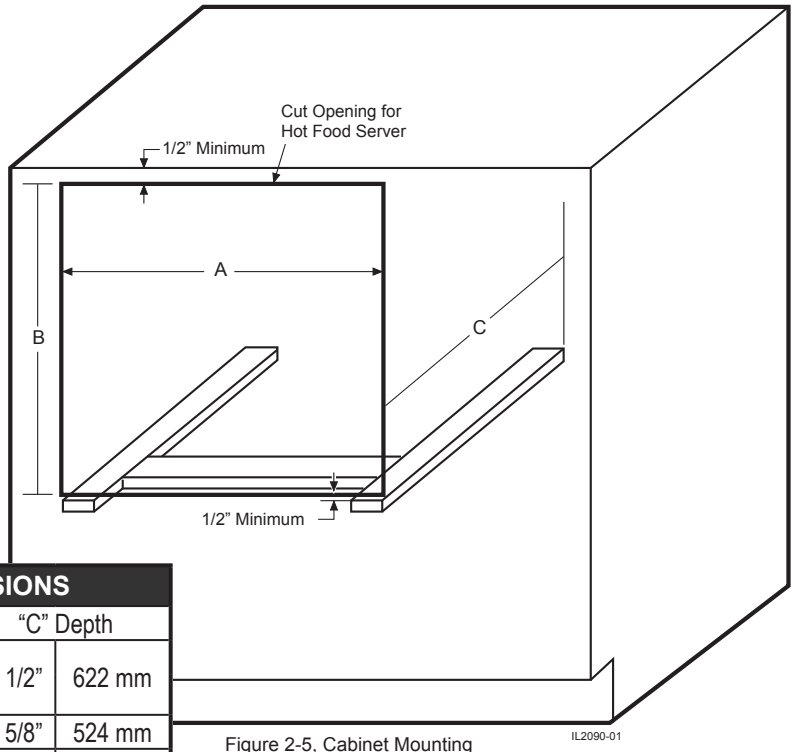

Figure 2-5, Cabinet Mounting

BUILT-IN MODELS OPENING DIMENSIONS						
Model	"A" Width		"B" Height		"C" Depth	
3A20A	23 3/8"	594 mm	11 1/2"	292 mm	24 1/2"	622 mm
3B20A			22 3/4"	578 mm		
3A80A	29 3/8"	746 mm	11 1/4'	286 mm	20 5/8"	524 mm
3B80A			21 3/4"	552 mm	20 3/4"	527 mm
3C80A			29 1/2"	749 mm		
3B84A			22"	559 mm		
3C84A			32 3/4"	832 mm		

3. **Electrical Connection.** All electrical connections required for this unit must be performed by a certified electrician. Built-in models are equipped with a 3/4" (19mm) diameter x 4ft. (122cm) long flexible conduit containing power lead pigtails and a ground wire. It is necessary that this conduit and the wiring leads connect at a junction box in accordance with local codes. Be sure to check the data plate on the front of the unit to be sure the power supply is correct. 115V units operate on voltage ranging from 110V to 125V. 220V units operate on voltage ranging from 208V to 240V.
4. Mount Unit in Cabinet.
   a. Remove the drawer(s) from the unit, pull the drawer(s) out to the stop. Grasp the entire drawer assembly at the sides as if to lift it and locate your thumbs on the tabs of the drawer slide *(figure 2-7)*. Press down on these tabs with your thumbs and simultaneously pull out on the drawer. Set drawer assembly aside.
   b. Lift the unit form both sides and start its backside into the cut out. Push back until the trim flange meets the face of the fixture.
   c. Place a level on the floor of the unit and check from side to side and front to back. If adjustments are necessary, slide the entire unit out of the fixture and adjust the leveling feet as required.
   d. Secure the unit into position after leveling. There are two holes in the unit bottom for this purpose (See Figure 2-6). Place a drill bit down through these two holes and bore two pilot holes into the crossbrace beneath. Tighten a pair of flat head sheet metal screws down through these holes and into the crossbrace. The unit is now installed.
   e. Replace the drawers. **NOTE:** The drawers of multiple drawer units are individually identified (ex: "TOP", "2" AND "3"). They should be reinstalled in their respective positions.

E. Initial Start-up

1. Turn on the branch line circuit breaker
2. Set the thermostat control dial at "10" the indiactor light will come on indicating that unit is calling for heat.
3. After a few minutes have elapsed, open a drawer and check that the unit is heating.

NOTE: If your unit is equipped with a separate thermostat for each drawer, complete Steps 2 & 3 for each drawer individually.

4. If unit fails to heat, recheck to be sure circuit breakers are on and electrical connections are properly made. If it still fails to heat, call a Toastmaster Authorized Service Agent.

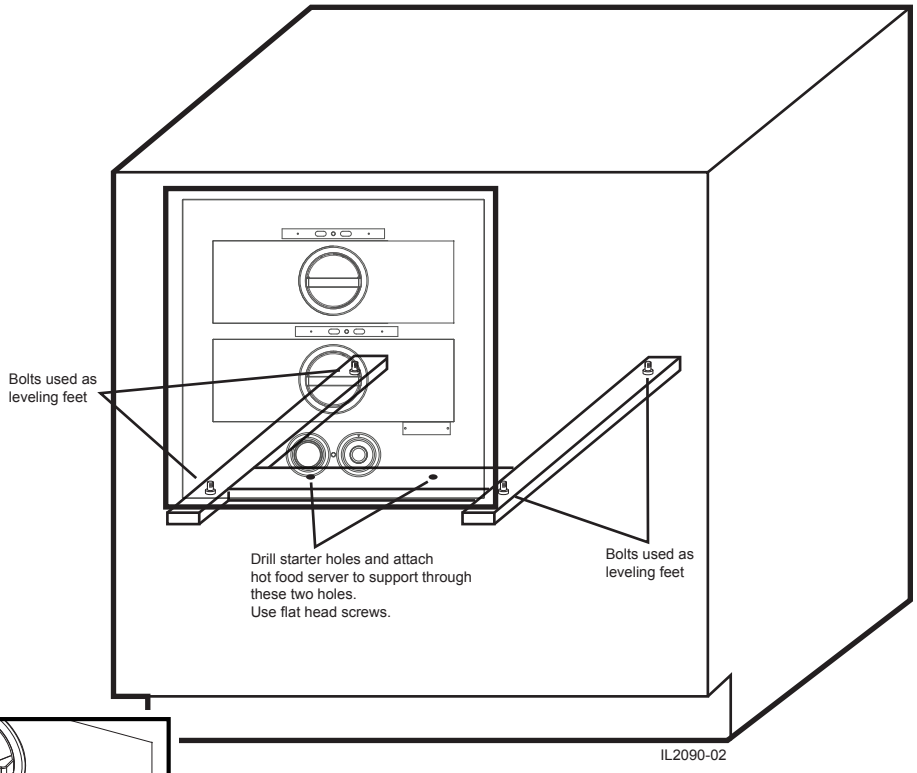

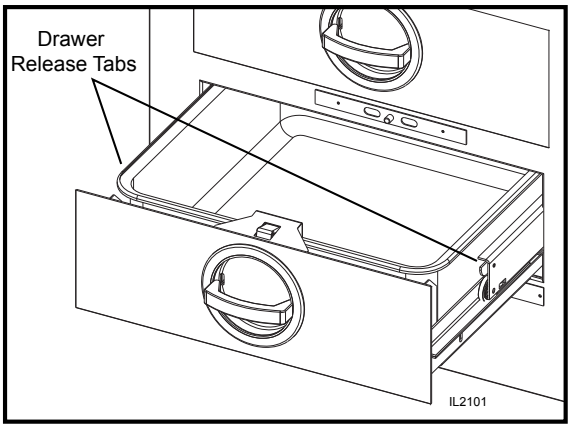

Above: Figure 2-6, Cabinet Mounting

Left: Figure 2-7, Drawer Release Tabs

OPERATION

A. Location of Controls

The following information provides a basic description of the hot food server components, their location and function they perform.

B. Function of Controls

Hot food server models are either equipped with one set of controls for the complete unit of a separate set of controls for each drawer. Units with one set of controls have a thermostat control, indicator light and thermometer located below the drawer(s). Units with separate drawer controls have them under each drawer.

1. **Thermostat Control Knob -** The thermostat control knob is used to set the temperature to your requirements. The control knob is graduated from “0” to “10” with “OFF” position. The maximum temperature setting is 10 (200°F [93°C]), the minimum temperature setting is 0 (100°F [38°C]).
2. **Indicator Light -** An indicator light cycles on and off as the thermostat calls for heat.
3. **Thermometer -** The thermometer indicates the actual holding temperature within the unit.
4. **Moisture Control -** Hot food servers operate on a principle of holding food at proper and safe temperatures and with proper moisture content. Because hot food servers produce dry heat, moisture loss from the food must be controlled. The moisture control allows the operator to control the rate at which the natural moisture of the food escapes.

   Slide the moisture control for the desired opening:

   Crisp: Slide is fully opened to allow rapid escape of moisture so crisp foods placed in the hot food server will not get soggy.

   Partially Open: Adjust slide for the desired amount of moisture retention.

   Moist: Slide is fully closed to retain all of the moisture in the food.

C. Operation

1. Turn the main power disconnect switch *(circuit breaker)* ON.
2. Turn the thermostat control knob to the desired setting. Allow the unit to preheat for the time shown in the following chart. The indicator light will cycle ON and OFF as it heats.
3. Read the thermometer after the preheat time has elapsed. If the indicated temperature is above or below the desired (set) temperature adjust the thermostat up of down unit the desired holding temperature is reached.
4. Place cooked food into hot food server drawer(s) **WHILE HOT**. Do not allow to cool.
5. Close drawer and set moisture control slide to the desired position appropriate for the food being held. Refer “FUNCTION CONTROLS” for moisture control settings.
6. Open drawers as required to remove and/or replenish food.

IMPORTANT: When holding bread and rolls it is important to rotate product. Rolls already in the drawer should be moved to the front and rolls being added should be placed at the rear.

Rolls that have been heated once and then cooled have lost most of their moisture while setting in the open air, they can not be reheated with satisfactory results.

D. Shutdown

1. Turn the thermostat control knob to “OFF”.

E. Pre-heating

Model	Preheat Time in Minutes	
	150°F (66°C)	*175°F (79°C)*
3A21D	18.5	25.8
3A20A		
3A20D		
3B20A	17.2	21.8
3B22D		24.8
3A80A/3A81D	18.8	26.2
3B80A/3B82D		
3B84A/3B84D		
3C84A/3C84D		
3C80A/3C8XD	20.6	28.2
3D8XD	22.3	29.7

CAPACITY PER PAN					
Model No	Baked Potatoes *(120 count)*	Vegetables *(#10 Can)*	Ribs *(lbs.)*	Hamburger Buns *(doz.)*	Dinner Rolls *(doz.)*
3A20A, 3B20A, 3B22D, 3A20D, 3A21D	35	7	25	5	6
3A80A, 3B80A, 3C80A, 3A81D, 3B82D, 3C8XD, 3D8XD	40	8	30	6-1/2	7
3B84A, 3C84A, 3B84D, 3C84D					

G. Recommended Temperature & Humidity Settings

Recommended Temperature and Humidity Settings		
	Temperature	**Humidity**
Soft Rolls: Clover Leaf, Cinnamon Rolls, Corn Bread, Doughnuts, Gingerbread, Hamburger & Frankfurter Buns, Muffins, Parker House, Soft Oval and Sweet Rolls.	150°F to 175°F (66°C to 79°C)	Moist
Hard Rolls: French, Kaiser, Swiss & Poppy Seed Rolls and Salt Sticks	150°F to 175°F (66°C to 79°C)	3/4 to Crisp
Vegetables: Asparagus, Beans, Beets, Boiled or Mashed Potatoes, Braised Celery, Broccoli, Brussel Sprouts, Carrots, Corn Dutch Potato Salad, Peas, Spinach & Tomatoes	175°F to 185°F (79°C to 85°C)	Moist
Meat, Fish & Eggs: Bacon, Baked Fish, Barbecued Spareribs, Beef or Pork Roasts, Chicken Croquettes, Chicken-Whole or Sliced, Frankfurters, Ground Steak Patties, Ham, Hash, Lamb and Pork Chops, Liver, Lobster and Shrimp, Meat Loaf, Roast Duck, Sausage, Scrambled Eggs, Swiss Steak and Veal Cutlets	165°F to 185°F (74°C to 85°C)	Moist
Casserole Dishes, Chicken Pot Pie, Cod Fish Cakes, Fried Chicken, Fried Fish, Hamburgers and Scallops	150°F to 175°F (66°C to 79°C)	Moist
Pies & Desserts: Apple Brown Betty, Plum Pudding and Steamed Raisin Puddings	160°F to 185°F (71°C to 85°C)	Moist
Miscellaneous Foods: Cream of Wheat, Farina, Macaroni & Cheese, Oatmeal, Spaghetti and Spanish Rice	165°F to 175°F (74°F to 79°C)	Moist

IMPORTANT: There are three main causes for rolls and foods to loose their moisture. The temperature is too high; the moisture control is not properly adjusted' or the length of time the rolls are in the drawer is too long. Investigate these causes if foods or rolls tend to loose moisture.

H. Daily Cleaning

CAUTION: BEFORE CLEANING BE SURE TO TURN OFF THE HOT FOOD SERVER'S MAIN DISCONNECT SWITCH.

1. Drawer Pans
   a. Open the drawer(s) and lift the pan(s) out.
   b. Empty contents of pan and wash pan in hot soapy water.
   c. Rinse with hot water and let air dry.
      or
   d. If desired pan can be pre-rinsed and then run through dishwasher and air dried.
2. Exterior Surface (Stainless Steel)
   a. Wash with a damp cloth or sponge wrung out of detergent and hot water solution.
   b. Rinse with a damp cloth or sponge wrung out of hot clean water.
   c. Dry and polish with a soft cloth
      or
   d. Clean the exterior using a good stainless steel cleaner/polish. Spray on and wipe off.
   e. For best results always polish in the direction of the finish grain of the metal.

CAUTION: DO NOT USE SCOURING POWDERS OR ABRASIVE PADS TO CLEAN THE EXTERIOR AS THEY WILL SCRATCH AND MAR THE FINISH.

3. Interior Surfaces (Aluminized Steel)

   a. Use a stiff non-metallic bristle brush to loosen food soil and crumbs. Let them fall to the floor of the unit.

   b. Wipe or vacuum accumulated loose soil from the unit paying particular attention to areas around heating elements.

   c. Wash interior with a damp cloth or sponge wrung out of detergent and hot water solution.

   d. Rinse with a damp cloth or sponge wrung out of hot clear water.

   e. Dry with a clean cloth plus allow time to air dry.

CAUTION: BE CAREFUL NOT TO ALLOW WATER TO RUN INTO ELECTRICAL COMPARTMENTS AS DAMAGED COULD RESULT.

I. Clean and Lubricate as Necessary

1. Drawer Carriages & Third Rail Members

   a. Remove drawer by pulling drawer open until it stops, grasping the carriage on both sides and pressing down on the tabs at the front of the third rail members and then removing drawer.

   b. Wash food residue from the carriage with hot detergent and water solution, rinse with clean hot water and wipe dry.

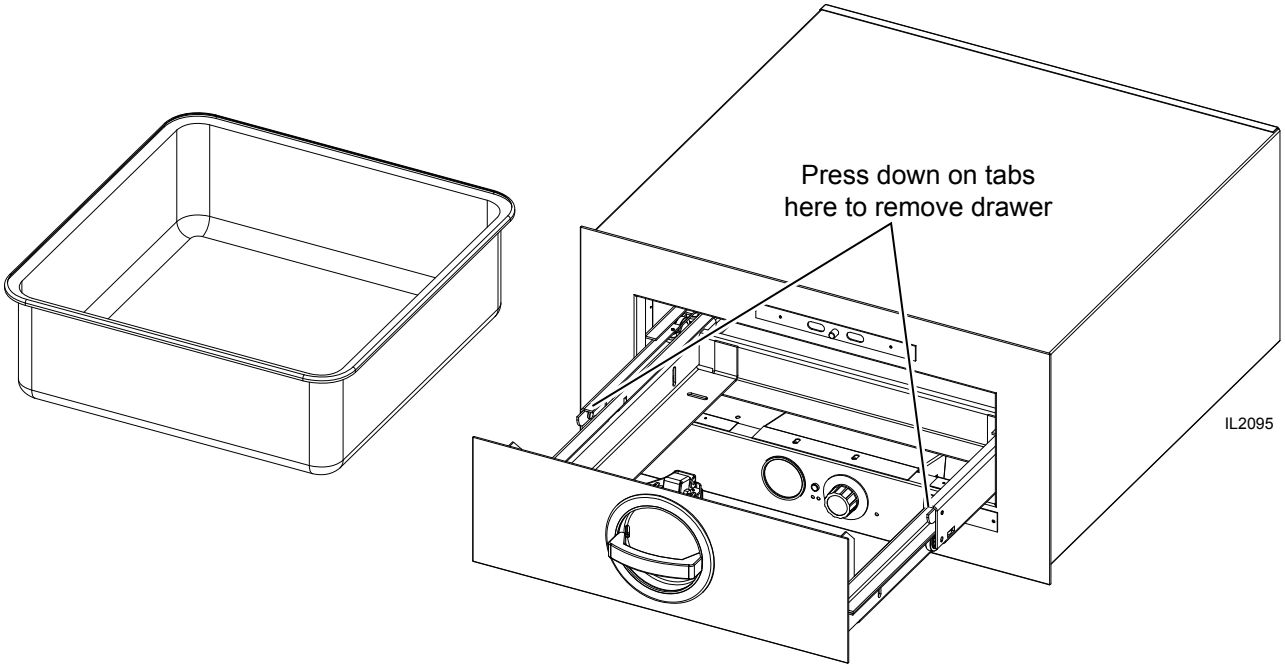

Fig. 3-3, Drawer Removal

CAUTION: DO NOT SUBMERGE DRAWER FRONTS. THEY ARE INSULATED AND THE INSULATION BE DAMAGED BY THE LIQUIDS.

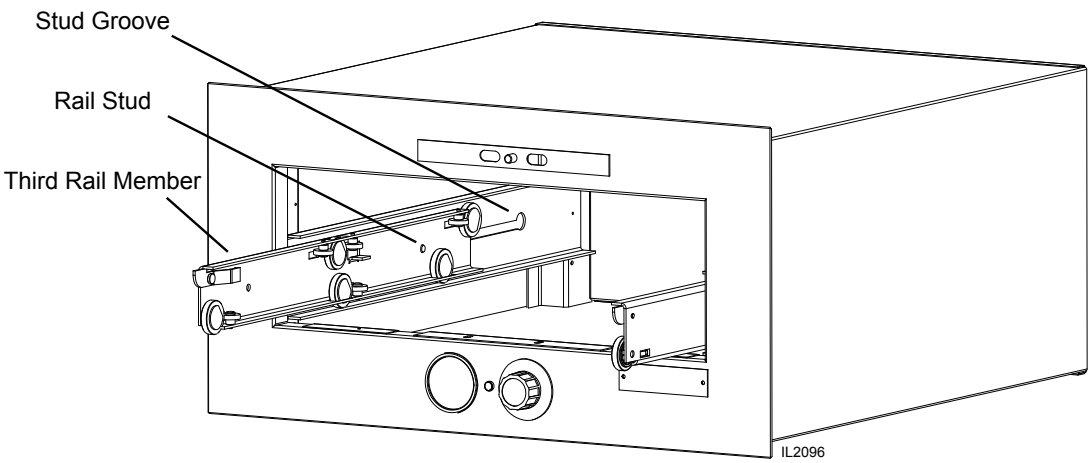

Fig. 3-5, Third Rail Removal

c. The third rail members ride in channels welded to the interior sides of the unit. Remove them by pushing back as far as possible, grasping the member and tilting it inward from the top. (Fig 3-5).
d. Use a stiff bristle brush to loosen food soil and crumbs.
e. Wash with a damp cloth or sponge wrung out of detergent and hot water solution.
f. Rinse with a damp cloth or sponge wrung out of hot clean water.
g. Dry with a clean cloth plus allow time to air dry.

CAUTION: DO NOT SUBMERGE. KEEP EXCESS LIQUID OUT OF BEARING RACES.

h. Periodically lubricate the third rail members and examine the rollers. They should all turn freely.
i. Lubricate the large rollers with high temperature food grade machine grease. Using your fingers, force grease into the bearings through the small crack formed at the flat spot on the mounting stud.
j. The small rollers should also be lubricated periodically with high temperature grease. Using your fingers, force a small amount of grease into the crack where bearing meets shaft.
k. Reinstall the third rail members.
l. Reinstall the drawers. The placement of each drawer is identified near the front of the right side (i.e. “TOP” “BOTTOM” “2” “3”). Be sure to re-install the drawers in their proper position.
m. Place the flats of the drawer carriage sides on the bottom rollers of the third rail members and push the drawer all the way closed. Then open the drawer to check that the stops are engaged.

WARNING: NEGLECTED THIRD RAIL MEMBERS MAY EVENTUALLY FAIL TO FUNCTION PROPERLY. ROLLERS MAY CEASE TO TURN. THIS COULD RESULT IN EXCESSIVE WEAR TO ROLLERS, MOUNTING CHANNELS AND DRAWER FRAMES.

LIMITED EQUIPMENT WARRANTY

Star Manufacturing [as well as its subsidiaries] warrants to the original purchaser of new Star products to be free from defects in material or workmanship, under normal and proper use and maintenance service as specified by Star and upon proper installation and start-up in accordance with the instructions supplied with each Star unit. Star's obligation under this warranty is limited to a period of one [1] year from the date of original installation, or eighteen [18] months from original invoice date, whichever occurs first. Defects that occur as a result of normal use, within the time period and limitations defined in this warranty, will at Star's discretion have the parts replaced or repaired by Star or a Star-authorized service agency.

THIS WARRANTY IS SUBJECT TO ALL LISTED CONDITIONS

Repairs performed under this warranty are to be performed by a Star authorized service agency. Star will not be responsible for charges incurred or service performed by non-authorized repair agencies. In all cases, the nearest Star-authorized service agency must be used. Star will be responsible for normal labor charges incurred in the repair or replacement of a warrantied product within 50 miles (80.5 km) of an authorized service agency. Time and expense charges for anything beyond that distance will be the responsibility of the owner. All labor will need to be performed during regular service hours. Any overtime premium will be charged to the owner. For all shipments outside the U.S.A. and Canada, please see the International Warranty for specific details. It is the responsibility of the owner to inspect and report any shipping damage claims, hidden or otherwise, promptly following delivery. No mileage or travel charges will be honored on any equipment that is deemed portable. In general, equipment with a cord and plug weighing less than 50 lb. (22.7 kg) is considered portable and should be taken or shipped to the closest authorized service agency, transportation prepaid.

CONTACT

Should you require any assistance regarding the operation or maintenance of any Star Manufacturing; phone, email or fax our service department. In all correspondence provide the model number and serial number of the unit needing service; include the voltage or gas type.

Normal Business Hours: 8:00 a.m. to 4:30 p.m. Central

Telephone: 800-264-7827 Tech Service Option 2

Email: TechService@partstown.com

www.Star-Mfg.com

WARRANTY EXCLUSIONS

THE FOLLOWING WILL NOT BE COVERED UNDER WARRANTY.

Star's sole obligation under this warranty is limited to either repair or replacement parts, subject to the additional limitations detailed below. This warranty neither assumes nor authorizes any person to assume obligations other than those expressly covered by this warranty.

- Any product which has not been used, maintained, or installed in accordance with the directions published in the appropriate installation sheet and/or owner's manual, including incorrect gas or electrical connection. Star is not liable for any unit which has been mishandled, abused, misapplied, subjected to harsh chemicals, modified by unauthorized personnel, damaged by flood, fire, or other acts of nature [or God], or which have an altered or missing serial number.
- Installation, labor, and job checkouts, calibration of heat controls, air and gas burner/bypass/pilot adjustments, gas or electrical system checks, voltage and phase conversions, cleaning of equipment, or seasoning of griddle surface.
- Replacement of fuses or resetting of circuit breakers, safety controls, or reset buttons.
- Replacement of broken or damaged glass components, quartz heating elements, and light bulbs.
- Labor charges for all removable and consumable parts in gas charbroilers and hotplates, including but not limited to burners, grates, and radiants.
- Any labor charges incurred by delays, waiting time, or operating restrictions that hinder a service technician's ability to perform service.
- Replacement of parts that fail or are damaged due to normal wear or labor for replacement of parts that can be replaced during a daily cleaning routine, such as but not limited to silicone belts, PTFE non-stick sheets, control labels, knobs, bulbs, fuses, quartz heating elements, baskets, racks, and grease drawers.
- Any economic loss of business or profits.
- Non-OEM parts. Use of non-OEM parts without Star's approval will void the warranty.
- Units exceeding one [1] year from original installation date, or more than eighteen [18] months from original purchase date, whichever comes first.

ADDITIONAL WARRANTIES

- Specific/chain-specific equipment may have additional and/or extended warranties.

PRODUCTS	PARTS	LABOR
Star Ultra Max ® fryers, griddles, charbroilers and hotplates	2 years	2 years
Star Max ® fryers, griddles, charbroilers and hotplates	2 years	2 years
Staltek™ roller grill coatings	5 years	
Cast iron grates, burners and burner shields	1 year	
Original Star, Toastmaster or Holman parts sold to repair equipment	90 days	

The foregoing warranty is in lieu of any, and all other warranties expressed or implied and constitutes the entire warranty.

Single Drawer Units

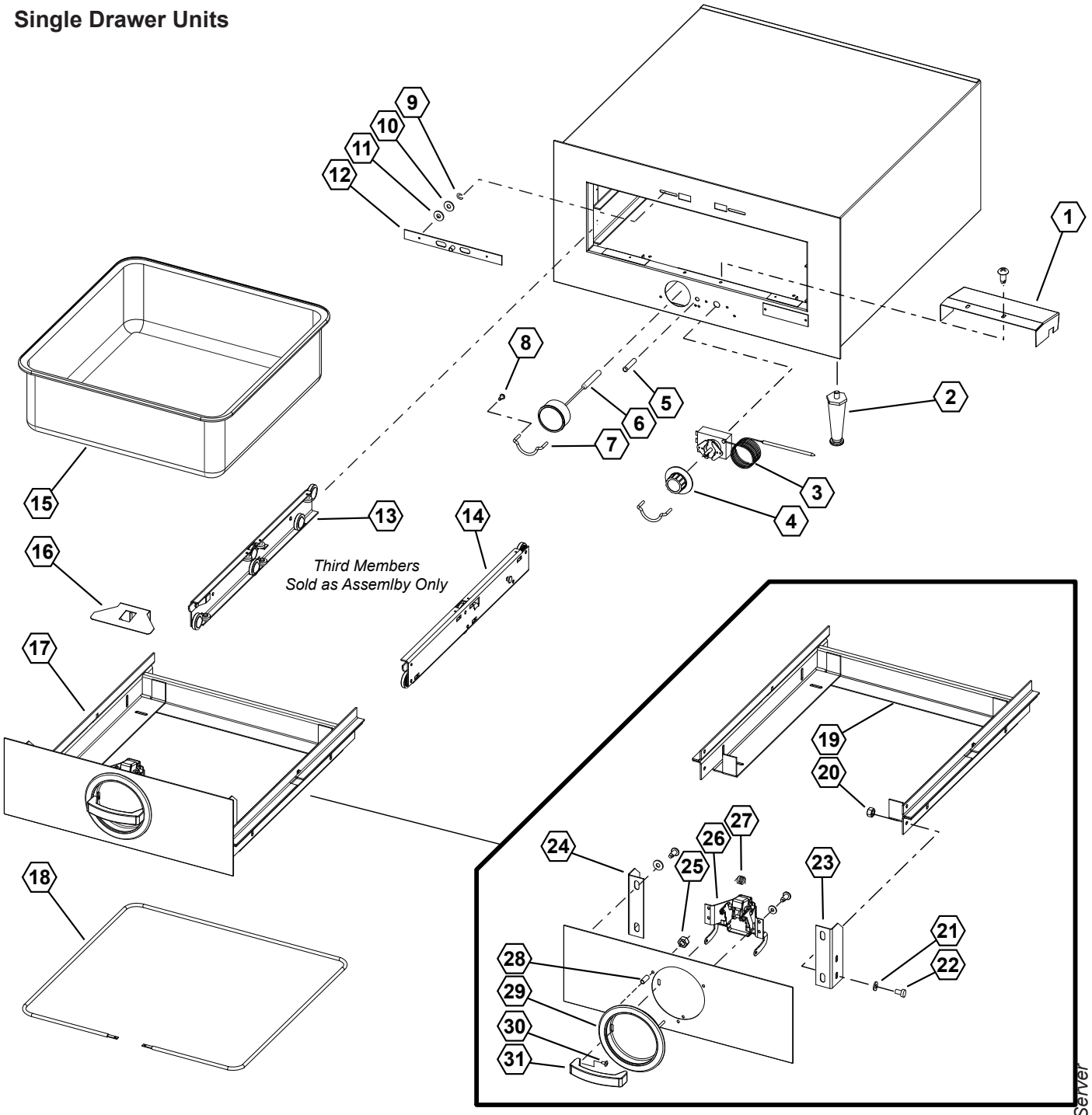

32 *(Items 23 thru 31)*

2M-3102301; Hot Food Server

Hot Food Server

Single Drawer Models

Model: 3A20A, 3A80A, 3A81D

Toastmaster®

IL2097, Rev. - 10/11/2010

PARTS LIST

(06-26) Rev. F

ONE DRAWER HOT FOOD SERVER MODELS: 3A20A, 3A80A, 3A81D				
Fig No	Part No.	Description	Qty	Application
1	C9-7005899	COVER,T'STAT	1	
2	2R-1523B8301	LEG, 4INBLACK PLASTIC	4	3A81D-120KFC, 3A81DT09-120, 3A81DT72-240
3	2T-3B70A8929	THERMOSTAT,100-200F	1	
4	2R-2100087	KNOB,TSTAT OFF & 0-10	1	
5	C9-TC0069	LIGHT,SIGNAL ASSY RED-115	1	3A20AT09-120, 3A80AT09-120, 3A80AWC-120V, 3A81D-120KFC, 3A81DT09-120
	C9-3B82D0181	ASSY,LIGHT SIGNAL RED 250		3A80AT72-240, 3A81DT72-240
6	2T-3004112	THERMOMETER	1	
7	C9-3A80A3007	GUARD,KNOB CONTROL	2	
8	2C-K1DS195	KNOB GUARD SCREW	4	
9	2C-B102851	RING,RETAINING	4	
9	2C-B102851	RING,RETAINING	6	3A81D-120KFC
10	2C-2001748	WASHER, SPRING #10	4	
11	2C-3B82D8827	WASHER,FLAT 7/16	4	
12	2R-7610283	ASSY,VENT SLIDE HFS	1	
13	C9-3B22D0045	ASSY,CHANNEL THIRD MEMBER LF	1	3A20AT09-120
	2I-3B82D0069	ASSY,CHANNEL THIRD MEMBER LF		3A80AT09-120, 3A80AT72-240, 3A80AWC-120V, 3A81DT09-120, 3A81DT72-240
14	C9-3B22D0041	ASSY,CHANNEL THIRD MEMBER RT	1	3A20AT09-120
	2I-3B82D0067	ASSY,CHANNEL THIRD MEMBER RT		3A80AT09-120, 3A80AT72-240, 3A80AWC-120V, 3A81DT09-120, 3A81DT72-240
15	2D-3B22D8411	PAN 17-5/8 X 17-5/8 X 5-1	1	3A20AT09-120
	2D-3B82D8411	PAN 23-3/4 X 14-38 X 5-1		3A80AT09-120, 3A80AT72-240, 3A80AWC-120V, 3A81D-120KFC, 3A81DT09-120, 3A81DT72-240
16	C9-7007086	COVER,CATCH HFS DRAWER	1	
17	C9-3B22D0143	DRAWER CARRIAGE ASSY w/FRONT	1	3A20AT09-120
	C9-3B82D0179	ASSY, DRAWER & CARRIAGE		3A80AT09-120, 3A80AT72-240, 3A80AWC-120V, 3A81D-120KFC
18	2N-3A20A8701	ELEMENT,HEATING 115V 450W	1	3A20AT09-120
	2N-3A81D8701	ELEMENT,HEATING 115V 450W		3A80AT09-120, 3A80AWC-120V, 3A81DT09-120
	2N-3A81D8703	ELEMENT, HEATING 220V 450W		3A80AT72-240, 3A81DT72-240
19	2W-3B22D0079	WLDMT, CARIAGE	1	3A20AT09-120
	2W-3B82D0151	WLDMT, CARIAGE		3A80AT09-120, 3A80AT72-240, 3A80AWC-120V, 3A81D-120KFC, 3A81DT09-120, 3A81DT72-240
20	2C-32259	WELD NUT 1/4-20 SS	4	
21	2C-A27469	WASHER,FLAT 1/4IN 7/8OD 1	4	
22	2C-A6153	SCR,MS HH 1/4-20X1/2 18-8	4	
23	C9-3B82D4065	DRAWER,FRT BRKT-LT	1	
24	C9-3B82D4063	BRACKET,DRAWER FRONT RT	1	
25	2C-2001347	NUT,KEPS 8-32 ZP	3	
26	C9-3B82D0175	ASSY,CATCH BRACKET & TRUS	1	
27	2P-3B82D8401	SPRING,DRAWER CATCH	1	
28	2A-3B82D8311	SPACER,DRAWER FRONT,3/16X	3	
29	C9-7608910	ASSY,DRAWER CUP HANDLE	1	
31	2R-3101758	HANDLE,DRAWER	1	
30	2C-35492	SCR,MS SLT FH 8-32X1/2 NP	2	

Toastmaster is a registered trademark of Toastmaster, A Middleby Company. All rights reserved.

PARTS LIST

(06-26) Rev. F

ONE DRAWER HOT FOOD SERVER MODELS: 3A20A, 3A80A, 3A81D				
Fig No	Part No.	Description	Qty	Application
32	C9-3B72D0147	ASSY,FRONT & CATCH DRAWER	1	3A20AT09-120
	C9-3B82D0177	ASSY, DRAWER FRONT & CATCH		3A80AT09-120, 3A80AT72-240, 3A80AWC-120V, 3A81DT09-120, 3A81DT72-240
NI	2K-3002648	BUSHING, HEYCO STRAIGHT	1	3A81D-120KFC
NI	2K-B212E8717	BUSHING, STRAIN RELIEF	1	3A81DT09-120
NI	C9-3A80A3009	COVER,BOTTOM	1	3A20AT09-120, 3A80AT09-120, 3A80AT72-240, 3A80AWC-120V
NI	C9-7605845	ASSY, CORDSET (5-15P) 125V15	1	3A81D-120KFC, 3A81DT09-120
NI	C9-7610652	ASSY, CORDSET(6-15P) 250V15	1	3A81DT72-240
NI	C9-TC0049	CORD ASSY 120V 5-15P 8FT	1	3A80AWC-120V
WIRING DIAGRAMS				
NI	C9-3A20A8905	DIAGRAM,WIRING 115V	1	3A20AT09-120, 3A80AT09-120, 3A80AWC-120V
NI	C9-3A20A8907	DIAGRAM, WIRING 230V	1	3A80AT72-240
NI	C9-3A81D8901	DIAGRAM, WIRING 115V	1	3A81D-120KFC
NI	C9-3A81D8905	DIAGRAM, WIRING 220V	1	3A81DT72-240
INSTALL INSTRUCTIONS				
NI	C9-3200085	INST,INSTALL 3A20 HFS	AR	3A20AT09-120, 3A80AT09-120

Toastmaster is a registered trademark of Toastmaster, A Middleby Company. All rights reserved.

Two, Three & Four Drawer, Single Controls

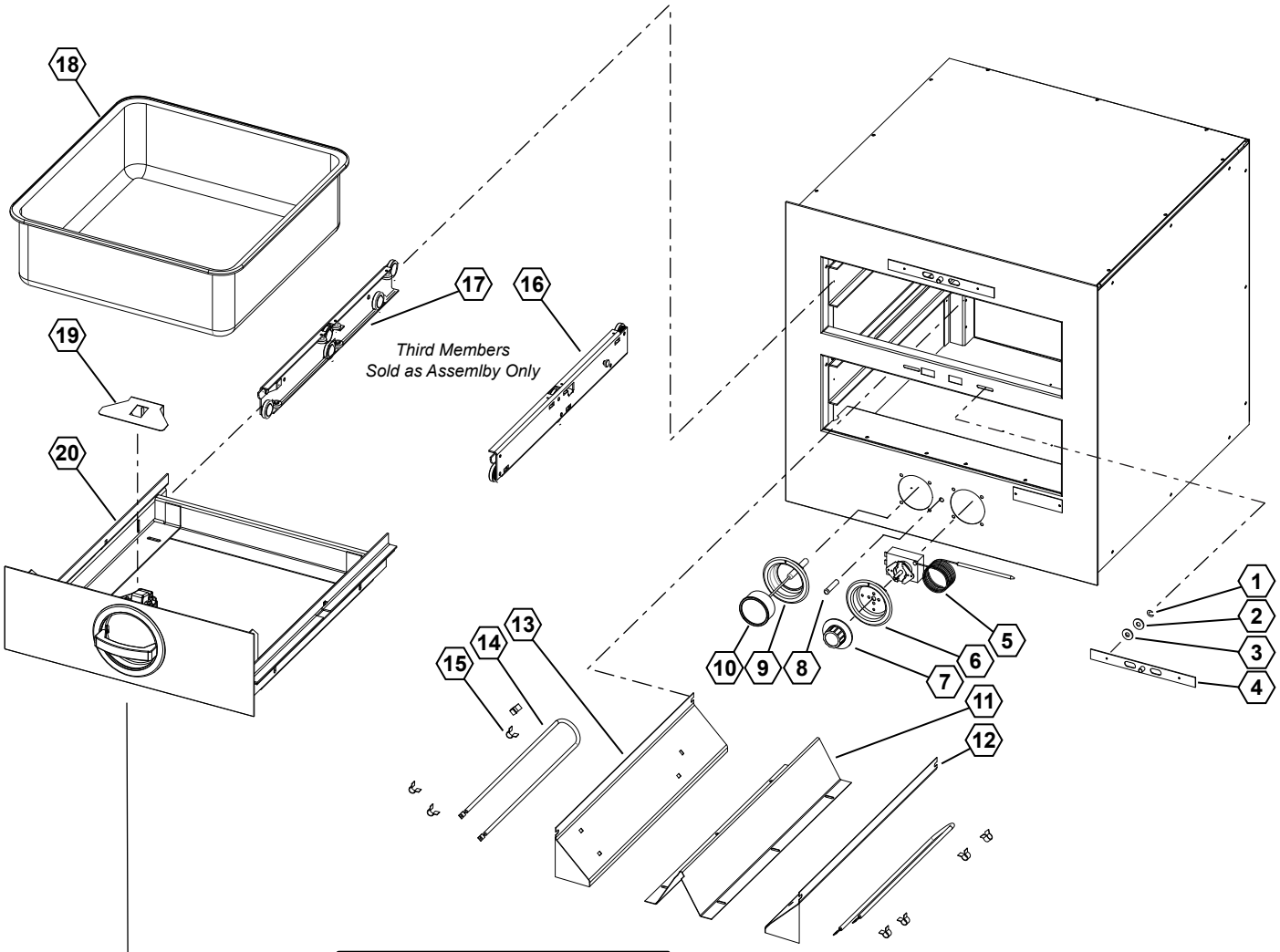

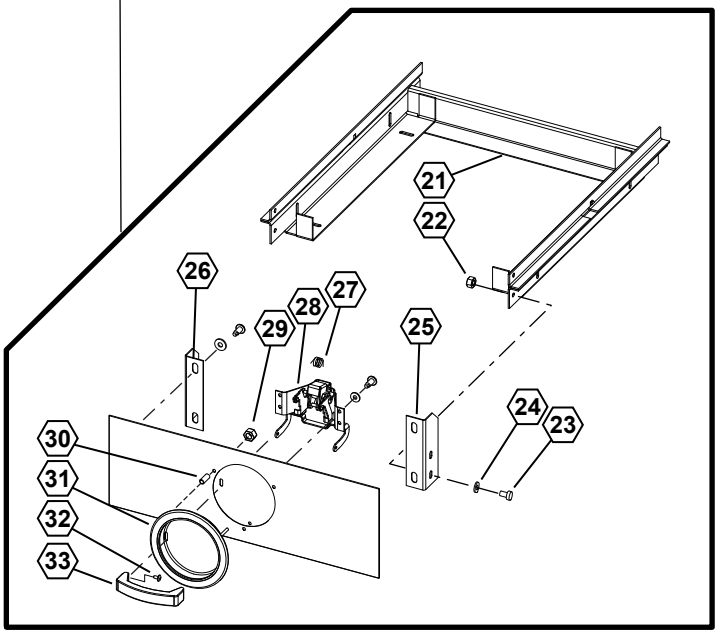

34 *(items 25 thru 33)*

Hot Food Server

Two, Three & Four Drawer,
Single Control Models

Model: 3B20A, 3B80A, 3C80A, 3D8XD

Toastmaster®

IL2098, Rev. A 5/6/2011

2M-3102301; Hot Food Server

PARTS LIST

(06-26) Rev. F

SINGLE CONTROLS, HOT FOOD SERVER MODELS: 3B20AT, 3B80AT, 3B82DT, 3C80AT, 3D8XDT				
Fig No.	Part Number	Description	Quantity	Application
1	2C-B102851	RING,RETAINING	8	3B20AT09-120, 3B20AT72-240
			12	3B80AWC-120V, 3C80AT
			16	3B80AT,3B82DT, 3D8XDT09-120
			24	3D8XDT72-240
2	2C-3B82D8827	WASHER,FLAT 7/16	4	3B20AT, 3B80AT
			6	3C80AT
			8	3D8XDT
3	2C-2001748	WASHER, SPRING #10	4	3B20AT, 3B80AT, 3B82DT
			6	3C80AT
			8	3D8XDT
4	2R-7610283	ASSY,VENT SLIDE HFS	2	3B20AT, 3B80AT, 3B82DT
			3	3C80AT
			4	3D8XDT
5	2T-3B70A8929	THERMOSTAT,100-200F	1	ALL
6	C9-1523B0001	WLDMT,CONTROL CUP	1	ALL
7	2R-2100087	KNOB,TSTAT OFF & 0-10	1	ALL
8	C9-E336A0116	LIGHT SIGNAL RED 250V	1	3B20AT72-240, 3B80AT72-240, 3C80AT72-240, 3D8XDT72-240
	C9-TC0069	LIGHT,SIGNAL ASSY RED-115		3B20AT09-120, 3B80AT09-120, 3B80AWC-120V, 3B82DT09-CFA, 3C80AT09-120, 3D8XDT09-120
9	C9-7609086	WLDMT,CUP THERMOMETER MTG	1	ALL
10	2T-3004112	THERMOMETER	1	ALL
11	C9-7007051	GUARD,WIRE (FRT-BACK)	1	3B20AT09-120, 3B20AT72-240
	C9-7007053			3B80AT, 3B80AWC, 3C80AT, 3D8XDT
12	C9-3B22D0029	ASSY,SHEATH ELEMENT RIGHT	1	3B20AT
	C9-3B82D0047			3B80AT, 3B80AWC, 3B82DT, 3C80AT, 3D8XDT
13	C9-3B22D0031	ASSY,SHEATH ELEMENT LEFT	1	3B20AT
	C9-3B82D0049			3B80AT, 3B80AWC, 3B82DT, 3C80AT, 3D8XDT
14	2N-3B82D8701	ELEMENT,HEATING 110V 500W	2	3B20AT, 3B80AT, 3B80AWC-120V, 3B82DT09-CFA
	2N-3D8XD8701			3C80AT, 3D8XDT
15	2C-30397	CLIP ELEM M P	8	ALL
16	C9-3B22D0041	ASSY,CHANNEL THIRD MEMBER	2	3B20AT
	2I-3B82D0067	ASSY,CHANNEL THIRD MEMBER		3B80AT, 3B80AWC, 3B82DT
			3	3C80AT
			4	3D8XDT
17	C9-3B22D0045	ASSY,CHANNEL THIRD MEMBER	2	3B20AT
	2I-3B82D0069	ASSY,CHANNEL THIRD MEMBER		3B80AT, 3B80AWC, 3B82DT
			3	3C80AT
			4	3D8XDT
18	2D-3B22D8411	PAN 17-5/8 X 17-5/8 X 5-1	2	3B20AT
	2D-3B82D8411	PAN 23-3/4 X 14-3/8 X 5-1		3B80AT, 3B80AWC, 3B82DT
			3	3C80AT
			4	3D8XDT

Toastmaster is a registered trademark of Toastmaster, A Middleby Company. All rights reserved.

PARTS LIST

(06-26) Rev. F

SINGLE CONTROLS, HOT FOOD SERVER MODELS: 3B20AT, 3B80AT, 3B82DT, 3C80AT, 3D8XDT				
Fig No.	Part Number	Description	Quantity	Application
19	C9-7007086	COVER,CATCH HFS DRAWER	2	3B20AT, 3B80AT, 3B80AWC, 3B82DT
			3	3C80AT
			4	3D8XDT
20	C9-3B22D0143	DWR CARROAGE ASSY W/FRONT	2	3B20AT
	C9-3B82D0179	ASSY, DRAWER CARRIAGE	2	3B80AT, 3B82DT
			3	3C80AT
			4	3D8XDT
21	2W-3B22D0079	WLDMT, CARIAGE	2	3B20AT09-120, 3B20AT72-240
	2W-3B82D0151	WLDMT, CARIAGE		3B80AT09-120, 3B80AT72-240, 3B80AWC-120V, 3B82DT
			3	3C80AT
			4	3D8XDT
22	2C-32259	WELD NUT 1/4-20 SS	8	3B20AT, 3B80AT, 3B82DT
			12	3C80AT
			16	3D8XDT
23	2C-A6153	SCR,MS HH 1/4-20X1/2 18-8	8	3B20AT
			16	3B80AT, 3B82DT
			24	3C80AT
24	2C-A27469	WASHER,FLAT 1/4IN 7/8OD 1	8	3B20AT, 3C80AT
			16	3B80AT, 3B80AWC, 3B82DT
			32	3D8XDT
25	C9-3B82D4063	BRACKET,DRAWER FRONT RT	2	3B20AT, 3B80AT, 3B80AWC
			4	3C80AT, 3B82DT
			6	3D8XDT
26	C9-3B82D4065	DRAWER,FRT BRKT-LT	2	3B20AT, 3B80AT, 3B80AWC, 3B82DT
			4	3C80AT
			6	3D8XDT
27	2P-3B82D8401	SPRING,DRAWER CATCH	2	3B20AT, 3B80AT, 3B82DT
			3	3C80AT
			4	3D8XDT
28	C9-3B82D0175	ASSY,CATCH BRACKET & TRUS	2	3B20AT, 3B80AT, 3B80AWC, 3B82DT
			3	3C80AT
29	2C-2001347	NUT,KEPS 8-32 ZP	6	3B20AT, 3B80AT, 3B82DT
			9	3C80AT
			12	3D8XDT
30	2A-3B82D8311	SPACER,DRAWER FRONT,3/16X	6	3B20AT, 3B80AT, 3B82DT
			9	3C80AT
			12	3D8XDT
31	C9-7608910	ASSY,DRAWER CUP HANDLE	2	3B20AT, 3B80AT, 3B80AWC, 3B82DT
			3	3C80AT
			4	3D8XDT
32	2C-35492	SCR,MS SLT FH 8-32X1/2 NP	4	3B20AT, 3B80AT, 3B82DT
			6	3C80AT
			8	3D8XDT
33	2R-3101758	HANDLE,DRAWER	2	3B20AT, 3B80AT, 3B82DT
			3	3C80AT
			4	3D8XDT

Toastmaster is a registered trademark of Toastmaster, A Middleby Company. All rights reserved.

PARTS LIST

(06-26) Rev. F

SINGLE CONTROLS, HOT FOOD SERVER MODELS: 3B20AT, 3B80AT, 3B82DT, 3C80AT, 3D8XDT				
Fig No.	Part Number	Description	Quantity	Application
34	C9-3B72D0147	ASSY,FRONT & CATCH DRAWER	2	3B20AT
	C9-3B82D0177	ASSY,DRAWER FRONT CATCH		3B80AT, 3B82DT
			3	3C80AT
			4	3D8XDT
NI	2K-31040	BUSHING HEYCO 7/8 OD	1	3B80AWC-120V, 3B82DT09-CFA
NI	2K-B212E8717	BUSHING, STRAIN RELIEF	1	3D8XDT
NI	C9-1511E0029	ASSY, CORDSET(5-15P)125V15	1	3D8XDT09-120
NI	C9-1511E0031	ASSY, CORDSET-250V15A 3' 6I	1	3D8XDT72-240
NI	C9-TC0048	CORD SET ASSY 16-3 HSJO	1	3B80AWC-120V, 3B82DT09-CFA
NI	2P-Z20782	4-5/8" SWIVEL CASTER w/BRAKE	2	3B82DT09-CFA
NI	2P-Z20783	4-5/8" SWIVEL CASTER	2	3B82DT09-CFA
WIRING DIAGRAMS				
AR	C9-3B20A8905	DIAGRAM,WIRING 115V	1	3B20AT09-120, 3B80AT09-120, 3B80AWC-120V, 3C80AT09-120, 3B82DT09-CFA
AR	C9-3B20A8911	DIAGRAM, WIRING 220V	1	3B20AT72-240, 3B80AT72-240, 3C80AT72-240
AR	C9-3B22D8911	DIAGRAM, WIRING 220V	1	3D8XDT72-240
AR	C9-3B72D8913	DIAGRAM, WIRING 115V	1	3D8XDT09-120
INSTALL INSTRUCTIONS				
AR	C9-3200084	INST,INSTALL 3B20 HFS	AR	3B20AT09-120, 3B20AT72-240

Toastmaster is a registered trademark of Toastmaster, A Middleby Company. All rights reserved.

Two, Three & Four Drawer, Individual Controls

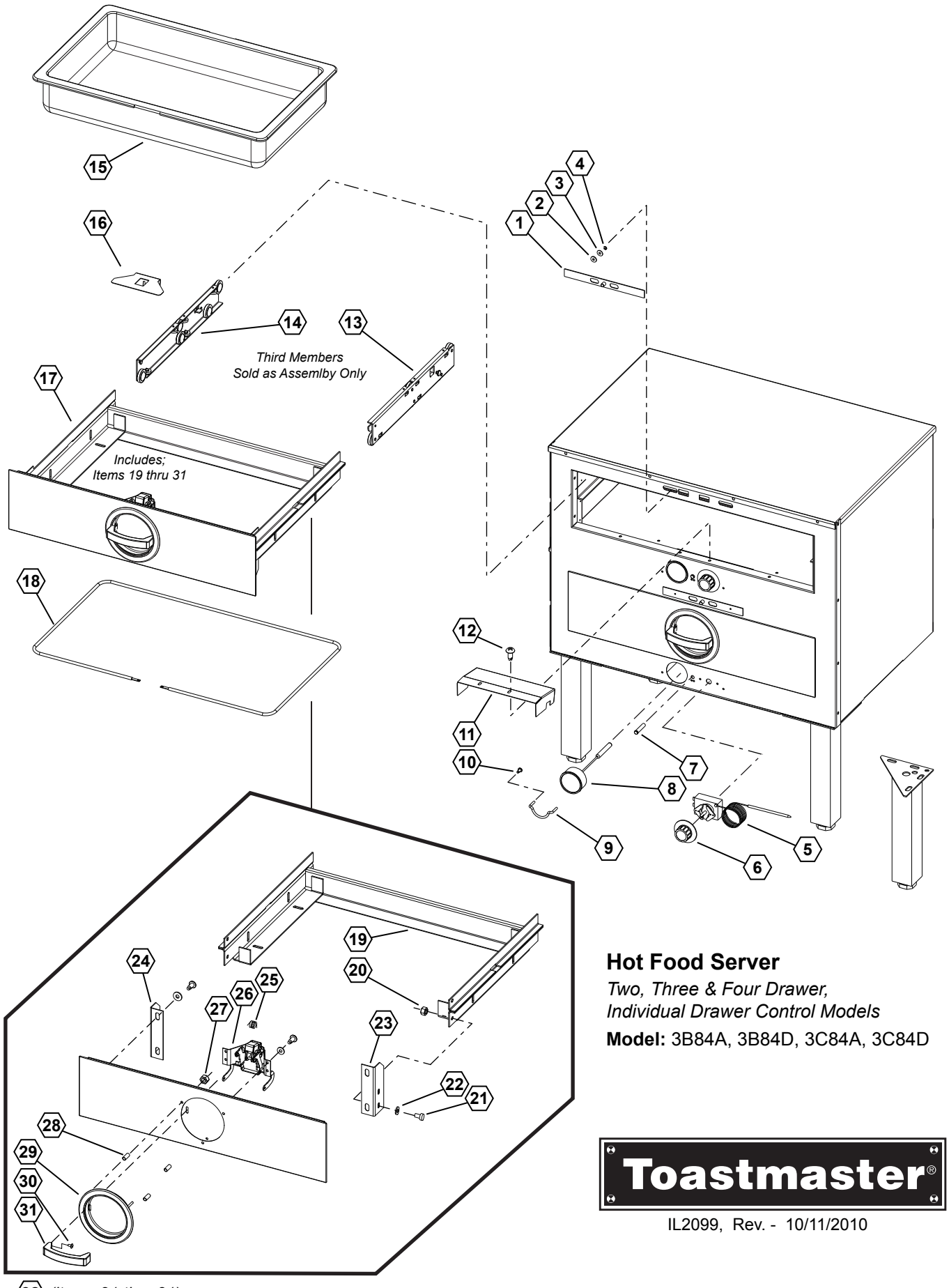

32 *(items 21 thru 31)*

Hot Food Server

Two, Three & Four Drawer,
Individual Drawer Control Models

Model: 3B84A, 3B84D, 3C84A, 3C84D

Toastmaster®

IL2099, Rev. - 10/11/2010

2M-3102301; Hot Food Server

PARTS LIST

(06-26) Rev. F

SEPARATE DRAWER CONTROLS, HOT FOOD SERVER MODELS: 3B84A, 3B84D, 3C84A, 3D84D				
Fig No.	Part No	Description	Quantity	Application
1	2R-7610283	ASSY,VENT SLIDE HFS	2	3B84A, 3B84D
			3	3C84A, 3C84D
2	2C-2001863	WASHER,FLAT .203X.63OX.05	4	3B84A, 3B84D
			6	3C84A, 3C84D
3	2C-2001748	WASHER,SPRING #10	4	3B84A, 3B84D
			6	3C84A, 3C84D
4	2C-B102851	RING,RETAINING	12	3B84AT09-120
5	2T-3B70A8929	THERMOSTAT,100-200F	2	3B84A, 3B84D
			3	3C84A, 3C84D
6	2R-2100087	KNOB,TSTAT OFF & 0-10	2	3B84A, 3B84D
			3	3C84A, 3C84D
7	C9-TC0069	LIGHT,SIGNAL ASSY RED-115	2	3B84AT09-120, 3B84DT09-120, 3B84DT09-KFC
			3	3C84AT09-120, 3C84DT09-120, 3C84DT09-120
	C9-E336A0116	LIGHT SIGNAL RED 250V	2	3B84AT72-240 / -SA, 3B84DT72-240
			3	3C84DT72-240, 3C84AT72-240
8	2T-3004112	THERMOMETER	2	3B84A, 3B84D
			3	3C84A, 3C84D
9	2R-2600068	BLANK,GUARD KNOB CONTROL	4	3B84A, 3B84D
			6	3C84A, 3C84D
10	2C-K1DS195	KNOB GUARD SCREW	8	3B84A, 3B84D
			12	3C84A, 3C84D
11	C9-7005899	COVER,T'STAT	2	3B84A, 3B84D
			3	3C84A, 3C84D
12	2C-35487	SCREW 8-32X5/16 PH TR HD	4	3B84A, 3B84D
			6	3C84A, 3C84D
13	2I-3B82D0067	ASSY,CHANNEL THIRD MEMBER	2	3B84A, 3B84D
			3	3C84A, 3C84D
14	2I-3B82D0069	ASSY,CHANNEL THIRD MEMBER	2	3B84A, 3B84D
			3	3C84A, 3C84D
15	2D-3B82D8411	PAN 23-3/4 X 14-3/8 X 5-1	2	3B84A, 3B84D
			3	3C84A, 3C84D
16	C9-7007086	COVER,CATCH HFS DRAWER	2	3B84A, 3B84D
			3	3C84A, 3C84D
17	C9-3B82D0179	ASSY,DRAWER CARRIAGE	2	3B84A, 3B84D
			3	3C84A, 3C84D
18	2N-3A81D8701	ELEMENT,HEATING 115V 450W	2	3B84AT09-120, 3B84DT09-120, 3B84DT09-KFC
			3	3C84AT09-120, 3C84AT09-120, 3B84DT09-120
	2N-3A81D8703	ELEMENT,HEATING 220V 450W	2	3B84AT72-240 / -SA, 3B84DT72-240
			3	3C84AT72-240, 3C84DT72-240
19	2W-3B82D0151	WLDMT,CARRIAGE	2	3B84A, 3B84D
			3	3C84A, 3C84D
20	2C-32259	WELD NUT 1/4-20 SS	8	3B84A, 3B84D
			12	3C84A, 3C84D
21	2C-A6153	SCR,MS HH 1/4-20X1/2 18-8	16	3B84A, 3B84D
			24	3C84A, 3C84D
22	2C-A27469	WASHER,FLAT 1/4IN 7/8OD 1	16	3B84A, 3B84D
			24	3C84A, 3C84D

Toastmaster is a registered trademark of Toastmaster, A Middleby Company. All rights reserved.

PARTS LIST

(06-26) Rev. F

Fig No.	Part No	Description	Quantity	Application
23	C9-3B82D4065	DRAWER,FRT BRKT-LT	2	3B84AT09-120
24	C9-3B82D4063	BRACKET,DRAWER FRONT RT	2	3B84AT09-120
25	2P-3B82D8401	SPRING,DRAWER CATCH	2	3B84A, 3B84D
			3	3C84A, 3C84D
26	C9-3B82D0175	ASSY,CATCH BRACKET & TRUS	2	3B84A, 3B84D
			3	3C84A, 3C84D
27	2C-2001347	NUT,KEPS 8-32 ZP	6	3B84A, 3B84D
			9	3C84A, 3C84D
28	2A-3B82D8311	SPACER,DRAWER FRONT,3/16X	6	3B84A, 3B84D
			9	3C84A, 3C84D
29	C9-7608910	ASSY,DRAWER CUP HANDLE	2	3B84A, 3B84D
			3	3C84A, 3C84D
30	2C-35492	SCR,MS SLT FH 8-32X1/2 NP	4	3B84A, 3B84D
			6	3C84A, 3C84D
31	2R-3101758	HANDLE,DRAWER	2	3B84A, 3B84D
			3	3C84A, 3C84D
32	C9-3B82D0177	ASSY,DRAWER FRONT & CATCH	2	3B84A, 3B84D
			3	3C84A, 3C84D
NI	2A-Z0314	FOOT, 4" DIE CAST	4	3B84DT09-120, 3B84DT72-240
NI	2B-55036	RACK,DIVIDER 15 SECTION	2	3B84DT09-KFC
NI	2K-45609	BUSHING HEYCO 3/8 ID .500	1	3B84DT09-120
NI	2K-B212E8717	BUSHING,STRAIN RELIEF	1	3B84AT09-120
NI	C9-45005	KIT, KFC SWVL CASTER W/BRK	1	3B84DT09-KFC
NI	C9-7605845	ASSY,CORDSET(5-15P)125V15	1	3B84DT09-120
NI	C9-7610652	ASSY,CORDSET(6-15P)250V15	1	3B84DT72-240, 3C84DT72-240
WIRING DIAGRAMS				
AR	C9-8000358	DIAGRAM, WIRING 120 3C84A	1	3C84AT09-120
AR	C9-8000358-1	DIAGRAM, WIRING 208/240V	1	3C84AT72-240
AR	C9-8000358-2	DIAGRAM, WIRING 120V 3C84D	1	3C84DT09-120
AR	C9-8000358-3	DIAGRAM, WIRING 208/240V	1	3C84DT72-240
AR	C9-8000361	DIAGRAM, WIRING 120V	1	3B84AT09-120
INSTALL INSTRUCTIONS				
NI	C9-3102206	INST,INSTALL,3B84 & 3C84	AR	3B84AT, 3C84AT

ACCESSORIES	
7C-3L6	LEG SET 6" ADJ FOOT HFS
7C-3L9	LEG SET 9" ADJ FOOT HFS
7C-3L12	LEG SET 12" ADJ FOOT HFS
7C-3L15	LEG SET 15" SDJ FOOT HFS
7C-3M3	CASTER KIT 3" SWIVEL
7C-3M4	CASTER SET (2 SWVL, 2 RDG)
7C-3M338STSB	CASTER SET (4) 2 w/BRK

2M-3102301; Hot Food Server

Toastmaster is a registered trademark of Toastmaster, A Middleby Company. All rights reserved.

NOTES:

Toastmaster®

BUILT BY STAR BRANDS
265 Hobson Street, Smithville, TN 37166
Phone: 800 264 7827 • Fax 314 781 5445
www.star-mfg.com

Printed in the U.S.A. • 2M-3102301 • Rev F • (06-26)
Specifications are subject to change without notice and are not intended for installation purposes.