ULTRA SLIM LINKABLE LED LIGHTS

FOR REFRIGERATED AND AMBIENT APPLICATIONS





SPECIFICALLY DESIGNED FOR PRODUCT DISPLAY APPLICATIONS

- Operating temperature from -4ºF to 105ºF (-20ºC to 40ºC)
- LED lamps emit little heat into refrigerated space
- Aluminum alloy housing with polycarbonate cover and end caps
- All lights to be operated by remote driver (cables and driver sold separately)
- Maximum connection length of fixtures is 20’ (6m)
- Lights can be linked directly together or with linking cable
- Supplied with metal mounting clips and zinc plated steel flat head screws

ENVIRONMENTALLY FRIENDLY / ENERGY EFFICIENT

- 50,000+ hours rated life; reduces landfill waste; lowers maintenance costs
- No ultraviolet emission; does not attract insects
- Mercury-free
- Contributes to LEED® energy use reduction credits
- Exceeds Federal Energy Act requirement
- ETL listed

1890 Swarthmore Avenue, Lakewood, NJ 08701
Tel: 800-526-3694 • Fax: 732-364-8110 • www.keilhardware.com

Keil®
Refrigeration Hardware

Technical Specifications for LED-RR Series





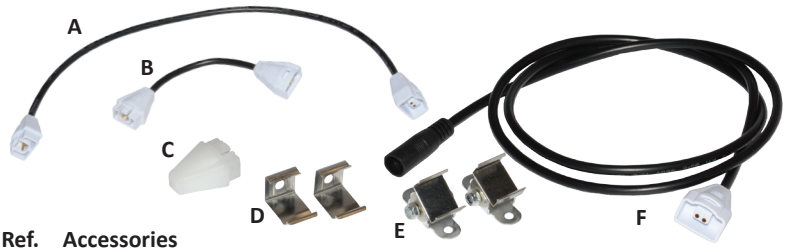

Specifications

Model	Actual Length (L)	Initial Lumens	Current Consumption	Watts
LED-RR12-x	11.8” (300mm)	350	160mA	4
LED-RR18-x	17.7” (450mm)	540	250mA	6
LED-RR20-x	19.7” (500mm)	610	290mA	7
LED-RR30-x	30.5” (775mm)	790	375mA	10
LED-RR35-x	35.8” (910mm)	920	458mA	12
LED-RR40-x	39.4” (1000mm)	1040	540mA	13
LED-RR48-x	47.2” (1200mm)	1440	660mA	16



Ref.	Accessories	
A	LED-RR-X112	12” (305mm) Linking Cable
A	LED-RR-X139	39” (991mm) Linking Cable
B	LED-RR-X103	3” (76mm) Linking Cable
C	LED-RR-X100	End Cap to Terminate Last Fixture
D	LED-RR-X303	(2) Mounting Clips for 30º Mounting Angle
D	LED-RR-X304	(2) Mounting Clips for 45º Mounting Angle
E	LED-RR-X305	(2) Mounting Clips for Rotary Mounting
F	LED-RR-X201	12” (305mm)Cable from Rigid Bar to LED Driver w/DC Connector
F	LED-RR-X202	39” (991mm)Cable from Rigid Bar to LED Driver w/DC Connector
-	LED-RR-X203	12” (305mm)Cable from Rigid Bar to LED Driver w/Flying Leads
-	LED-RR-X204	39” (991mm)Cable from Rigid Bar to LED Driver w/Flying Leads
G	LED-RR-X302	(2) Mounting Clips Parallel to Mounting Surface (included)

Drivers

Ref.	Model	Input Voltage	Amperage	Output	Max Fixtures	Cord Length
J	LED-RR-402	100 - 240VAC	4.0	96W	19 ft	48” Input/Output
K	LED-RR-401	100 - 240VAC	2.5	60W	12 ft	48” Input, 70”Output
L	LED-RR-400	100 - 240VAC	1.5	36W	7 ft	

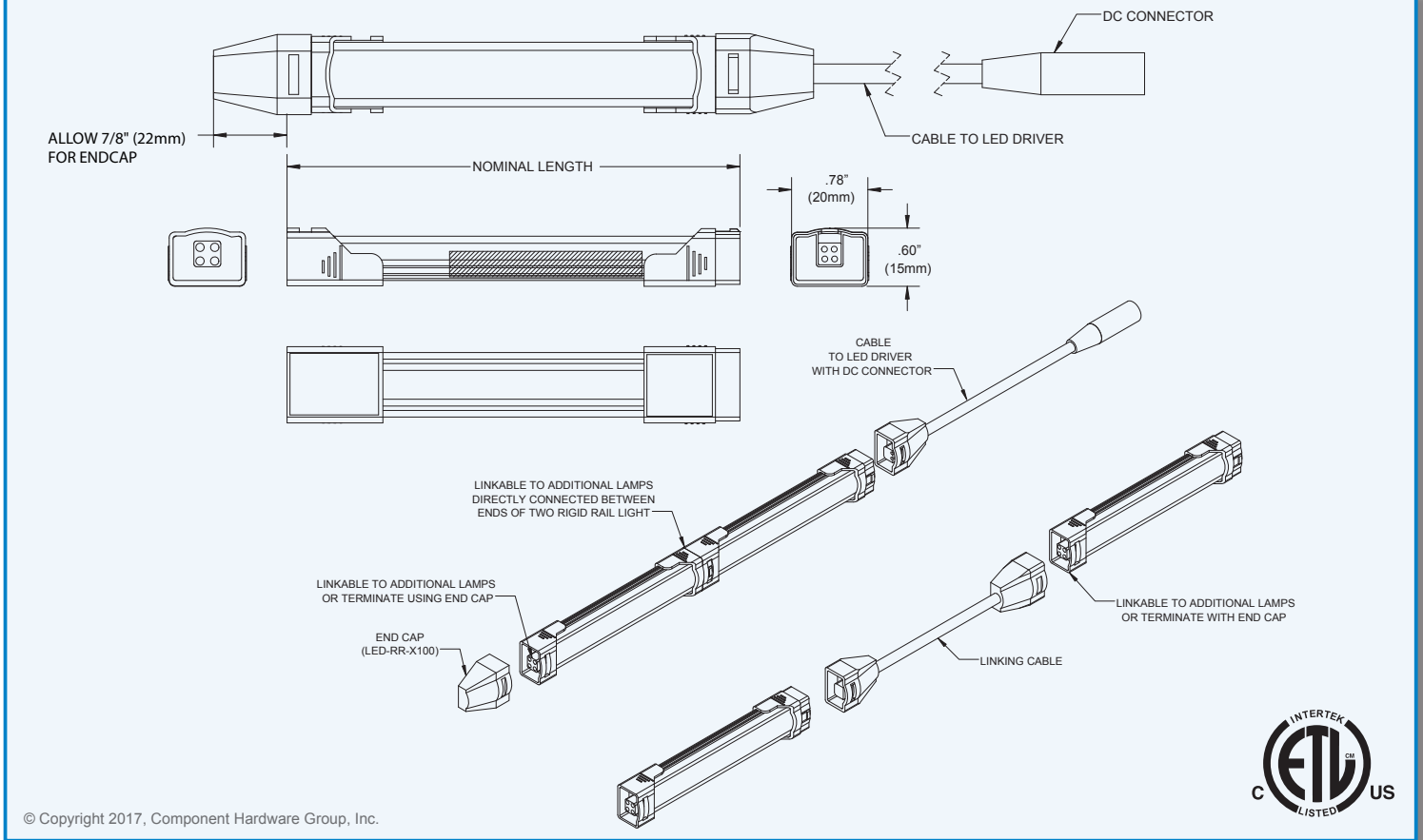

© Copyright 2017, Component Hardware Group, Inc.

1890 Swarthmore Avenue, Lakewood, NJ 08701 • Tel: 800-526-3694 • Fax: 732-364-8110 • www.keilhardware.com