SCS-2
2 Compartment Scullery Sink

General Information

Project Name: _____

Consultant: _____

Item #: _____

Model #: _____

Quantity: _____



Shown with Left & Right Drainboards

Specifications

SCS-2 Model Scullery Sink is constructed of 14GA or 16GA Type 304 stainless steel with single or multi-compartment bowls and double wall separators. Sinks are mounted on 16GA, 1⅝ stainless steel tubes with stainless steel adjustable feet for leveling. Sink bowls are coved at all corners and pitched to a 3½" waste cutout.

Full length backsplash is 10" high and holes for faucets 8" on center accommodates your choice of faucets. The entire unit is finished with a satin brush finish. Drainboard extensions are separately supported with stainless steel legs, as required.

Sound Deadening is standard on all scullery sinks.

Product Guide

IMC Scullery/Service Sinks Model "SCS" are designed for heavy duty application in large or medium Institutional Facilities or where constant use is likely.

Options available are designed to make this product suitable in a variety of locations in the facility for applications, such as Deli, Vegetable or Bakery sinks or for pot cleaning.

DRAWINGS

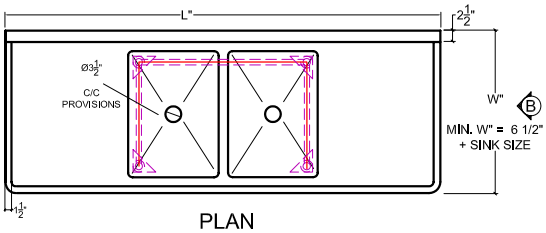

PLAN

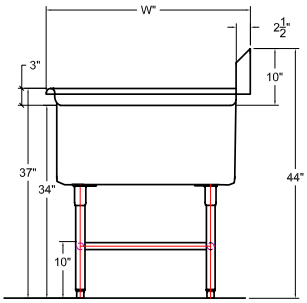

SIDE ELEVATION

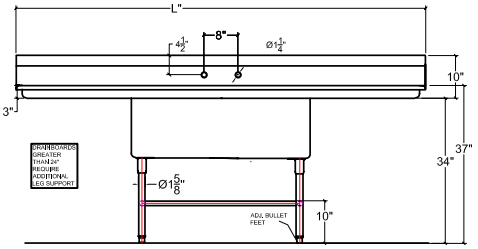

ELEVATION

*Non-flush front: add sink bowl size + 6½" for extra width

IMC Teddy •11 Ranick Drive South• Amityville, NY 11701• (800) 221-5644• info@imcteddy.com• www.imcteddy.com

IMC/TEDDY
DECADES OF FINE CRAFTSMANSHIP

SCS-2
2 Compartment Scullery Sink

2 COMPARTMENT SCULLERY SINK

1 Drainboard				
14GA Model	**16GA Model**	**Overall Size (W x L x H)**	**Bowl Size**	**Drainboard Length**
☐ SCS-24-1620-18R	☐ SCS-26-1620-18R	24" x 52½" x 44"	16" x 20"	18"
☐ SCS-24-1620-24R	☐ SCS-26-1620-24R	24" x 58½" x 44"	16" x 20"	24"
☐ SCS-24-1620-30R	☐ SCS-26-1620-30R	24" x 64½" x 44"	16" x 20"	30"
☐ SCS-24-1620-36R	☐ SCS-26-1620-36R	24" x 70½" x 44"	16" x 20"	36"
☐ SCS-24-2020-20R	☐ SCS-26-2020-20R	24" x 62½" x 44"	20" x 20"	20"
☐ SCS-24-2020-24R	☐ SCS-26-2020-24R	24" x 66½" x 44"	20" x 20"	24"
☐ SCS-24-2020-30R	☐ SCS-26-2020-30R	24" x 72½" x 44"	20" x 20"	30"
☐ SCS-24-2020-36R	☐ SCS-26-2020-36R	24" x 78½" x 44"	20" x 20"	36"
☐ SCS-24-2424-24R	☐ SCS-26-2424-24R	28" x 74½" x 44"	24" x 24"	24"
☐ SCS-24-2424-30R	☐ SCS-26-2424-30R	28" x 80½" x 44"	24" x 24"	30"
☐ SCS-24-2424-36R	☐ SCS-26-2424-36R	28" x 86½" x 44"	24" x 24"	36"
☐ SCS-24-2028-24R	☐ SCS-26-2028-24R	32" x 66½" x 44"	20" x 28"	24"
☐ SCS-24-2028-30R	☐ SCS-26-2028-30R	32" x 72½" x 44"	20" x 28"	30"
☐ SCS-24-2028-36R	☐ SCS-26-2028-36R	32" x 78½" x 44"	20" x 28"	36"
2 Drainboards				
14GA Model	**16GA Model**	**Overall Size (W x L x H)**	**Bowl Size**	**Drainboard Length**
☐ SCS-24-1620-18RL	☐ SCS-26-1620-18RL	24" x 69" x 44"	16" x 20"	18"
☐ SCS-24-1620-24RL	☐ SCS-26-1620-24RL	24" x 81" x 44"	16" x 20"	24"
☐ SCS-24-1620-30RL	☐ SCS-26-1620-30RL	24" x 93" x 44"	16" x 20"	30"
☐ SCS-24-1620-36RL	☐ SCS-26-1620-36RL	24" x 105" x 44"	16" x 20"	36"
☐ SCS-24-2020-20RL	☐ SCS-26-2020-20RL	24" x 81" x 44"	20" x 20"	20"
☐ SCS-24-2020-24RL	☐ SCS-26-2020-24RL	24" x 89" x 44"	20" x 20"	24"
☐ SCS-24-2020-30RL	☐ SCS-26-2020-30RL	24" x 101" x 44"	20" x 20"	30"
☐ SCS-24-2020-36RL	☐ SCS-26-2020-36RL	24" x 113" x 44"	20" x 20"	36"
☐ SCS-24-2424-24RL	☐ SCS-26-2424-24RL	28" x 97" x 44"	24" x 24"	24"
☐ SCS-24-2424-30RL	☐ SCS-26-2424-30RL	28" x 109" x 44"	24" x 24"	30"
☐ SCS-24-2424-36RL	☐ SCS-26-2424-36RL	28" x 121" x 44"	24" x 24"	36"
☐ SCS-24-2028-24RL	☐ SCS-26-2028-24RL	32" x 89" x 44"	20" x 28"	24"
☐ SCS-24-2028-30RL	☐ SCS-26-2028-30RL	32" x 101" x 44"	20" x 28"	30"
☐ SCS-24-2028-36RL	☐ SCS-26-2028-36RL	32" x 113" x 44"	20" x 28"	36"

OPTIONS

- ☐ **SB** - Scrap Basket
- ☐ **SRB** - Scrap Block
- ☐ **CRT** - Corner Turn
- ☐ **XDRB** - Extra Drainboard
- ☐ **RG** - Rack Guide
- ☐ **CC** - Column Cut Out
- ☐ **WHR** - Working Height Revision
- ☐ **WTR-48** - Waste Trough 6" x 48" x 4" Deep
- ☐ **FF-50** - Flanged Feet (Each)
- ☐ **BDR** - Basket Drain
- ☐ **16D-2** - 16" Deep Sink in Lieu of Standard
- ☐ **SCV** - Sink Cover - Stainless Steel
- ☐ **CST** - Cover Storage Compartment
- ☐ **PVH** - Provision for Heater
- ☐ **PWP** - Provision for Water Pump
- ☐ **DP** - Drainboard Pitched to Sink
- ☐ **SSU** - Stainless Steel Undershelf
- ☐ **RSP** - Integral Side Splash (Each)
- ☐ **NFF** - Non-Flush Front (Increases W)
- ☐ **LD** - Lever Drain
- ☐ **LDO** - Lever Drain with Overflow
- ☐ **KPSF** - 12" Kettle & Pot Sink Faucet
- ☐ **STG** - S/S Perforated Sanitizer Guard
- ☐ **ESB** - Enclosed Backsplash
- ☐ **SPB** - Support Bracket for Lever Drain Handle
- ☐ **PRFF** - Pre-Rinse Unit - 4" Centers, Splash Mounted
- ☐ **PUD** - Provision for Undercounter Dishwasher
- ☐ **SSA** - Stainless Steel Apron
- ☐ **CB** - Cutting Board
- ☐ **OFC** - Overflow Compartment

*See Price List for more options

Specifications subject to change without notice.

IMC Teddy •11 Ranick Drive South• Amityville, NY 11701• (800) 221-5644• info@imcteddy.com• www.imcteddy.com