unity Datasheet

Project:	Quantity:
Model #:	Approval:

For Commercial Use Only

Unity U-CR1 17" Black Countertop Display Refrigerated Merchandiser - 1.8 cu ft.



FEATURES

- Black coated steel exterior
- Temperatures between 32 - 50 degrees F
- Double pane swing glass door
- Adjustable heavy-duty shelf
- LED interior lighting
- Mechanical control system
- Eco-friendly R600a refrigerant
- Leveling feet
- 110v plug and play
- Compact countertop display

This unit are perfect for bars, restaurants, nightclubs, and other establishments that serve cans and bottles of beer, keg, and wine. A great way to draw customers' attention to what's on offer towards boosting impulse sales in your establishment.

- cETLus Listed
- ETL Sanitation Listed

Conforms to UL & NSF Standards

⚠ This unit requires a dedicated 15 Amp Circuit installed by a licensed electrician.

USR Brands is a US supplier of premium quality commercial cooking, refrigeration and food preparation equipment. Our aim is simple. Produce industry-leading commercial restaurant equipment at reasonable prices, and back it all up with an easy to understand, no nonsense warranty that people can count on.

USR BRANDS® RESERVES THE RIGHT TO CHANGE SPECIFICATIONS WITHOUT NOTICE

unity Datasheet

Project:	Quantity:
Model #:	Approval:

For Commercial Use Only

TECHNICAL DATA

DIMENSIONS

Exterior Dimensions	17.13"L x 19.7"D x 20.08"H
Top Interior Dimensions	14.76"L x 13.3"D x 8.67"H
Bottom Interior Dimensions	14.76"L x 9.25"D x 7.09"H
Packaging Dimensions	21"L x 23"D x 22"H
Net Volume	1.8 cu. ft.
Unit Weight	43 lb.
Shipping Weight	47 lb.

ELECTRICAL

Voltage	115
Hertz	60
Phase	1
Amps	1
Watts	80W
Plug Type	NEMA 5-15P
Power Cord Length	74"

COOLING

Temperature Range	32°F to 50°F
Refrigerant	R600a
Temperature Controller	Digital

CONSTRUCTION

Exterior Material	Painted Sheet
Exterior Color	Black
Interior Material	ABS
Insulation Material	Foamed-in-Place Polyurethane
Door Style	Swing
Door Type	Glass
Shelf Quantity	1
Shelf Material	Coated Steel
Adjustable Shelf	Yes
Interior Light	L.E.D
Adjustable Feet	Yes

TECHNICAL DRAWING

MODEL: U-CR1

MFR ITEM: SC52

NEMA 5-15P

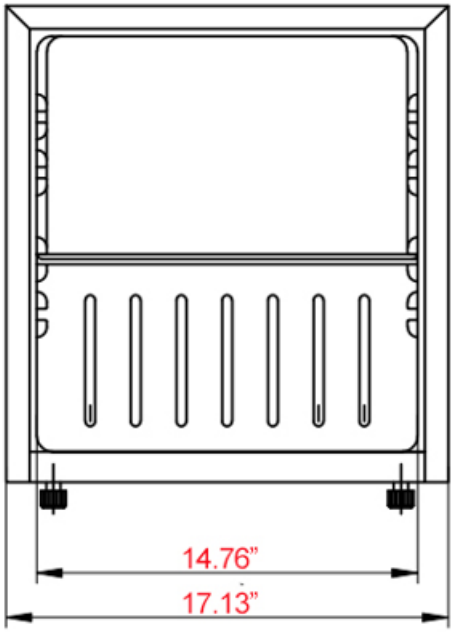

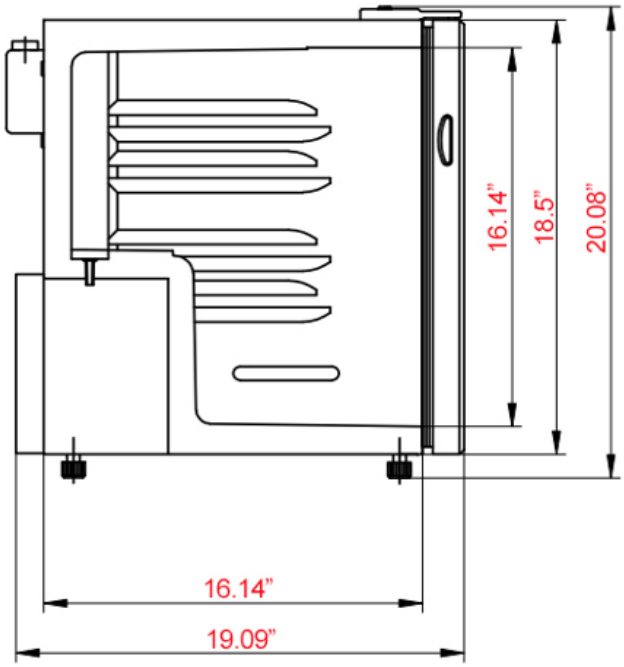

CA Residents: Prop 65 Warning

USR BRANDS® RESERVES THE RIGHT TO CHANGE SPECIFICATIONS WITHOUT NOTICE