unity **Datasheet**

Project:	Quantity:
Model #:	Approval:

For Commercial Use Only

U-CR2 16" Countertop Swing Door Merchandising Refrigerator



FEATURES

- Whited coated exterior
- High efficiency with air-forced cooling
- Refrigeration system keeps food at safe temperatures
- Self-closing doors
- Adjustable feet
- Adjustable heavy-duty PVC coated shelves
- Mechanical control system
- Brilliant interior LED light
- Removable installation board
- Hydro-Carbon R600a refrigerant

This Unity commercial glass door merchandiser refrigerator is perfect for restaurants, delis, bakeries, or cafes. It keeps your food products at safe temperatures.

- cETLus Listed
- ETL Sanitation Listed

Conforms to UL & NSF Standards

⚠ This unit requires a dedicated 15 Amp Circuit installed by a licensed electrician.

USR Brands is a US supplier of premium quality commercial cooking, refrigeration and food preparation equipment. Our aim is simple. Produce industry-leading commercial restaurant equipment at reasonable prices, and back it all up with an easy to understand, no nonsense warranty that people can count on.

USR BRANDS® RESERVES THE RIGHT TO CHANGE SPECIFICATIONS WITHOUT NOTICE

unity Datasheet

Project:	Quantity:
Model #:	Approval:

For Commercial Use Only

TECHNICAL DATA

DIMENSIONS

Exterior Dimensions	16.5"L x 18.11"D x 31.69"H
Interior Dimensions	13.11"L x 13.58"D x 20"H
Packaging Dimensions	18.11"L x 19.88"D x 34.84"H
Net Volume	2 cu. ft.
Unit Weight	56.2 lb.
Shipping Weight	60 lb.

ELECTRICAL

Voltage	115
Hertz	60
Phase	1
Amps	0.94
Watts	101W
Plug Type	NEMA 5-15P
Power Cord Length	84"

COOLING

Temperature Range	33°F to 50°F
Refrigerant	R600a
Temperature Controller	Mechanical

CONSTRUCTION

Exterior Material	Painted Sheet
Exterior Color	White
Interior Material	Painted Sheet
Insulation Material	Foamed-in-Place Polyurethane
Door Style	Swing
Door Type	Glass
Shelf Size	(2) 12.36"L x 13"D
Shelf Material	PVC Coated Steel
Adjustable Shelf	Yes
Interior Light	L.E.D
Feet	Adjustable

TECHNICAL DRAWING

MODEL: U-CR2

MFR ITEM: SS-P50FA

NEMA 5-15P

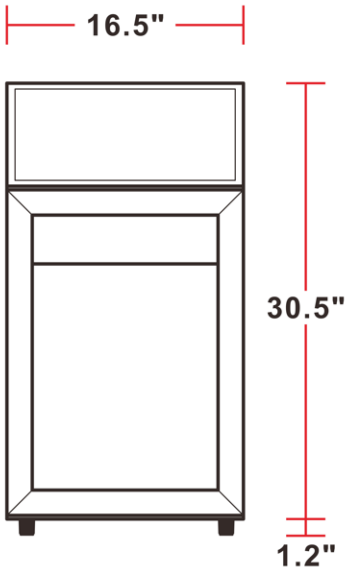

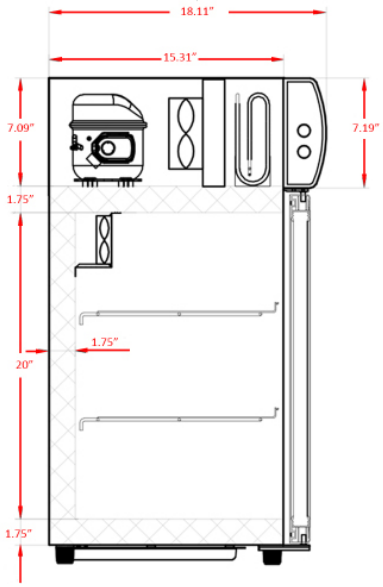

CA Residents: Prop 65 Warning

USR BRANDS® RESERVES THE RIGHT TO CHANGE SPECIFICATIONS WITHOUT NOTICE