IMC/TEDDY
DECADES OF FINE CRAFTSMANSHIP

IBT-36
Mobile Ice Station

General Information

Project Name: _____

Consultant: _____

Item #: _____

Model #: _____

Quantity: _____



PROUDLY MADE IN THE USA

Specifications

IBT-36 Model Mobile Ice Station is constructed of 14GA Type 306 stainless steel. Ice bin area is 19" x 31" x 7" deep with perforated false bottom and 1" drain. Ice bin is insulated double wall construction.

Cabinet base under ice bin for storage has two hinged doors with pull handles and locks for security. 18GA S/S apron and panels enclose the unit. Unit comes with 5" casters, (2) with brakes.

12" wide utility shelf is constructed of 16GA type 300 series stainless steel. Shelf is on fold down brackets.

Overall size of unit is 24" wide x 36" long x 34" high, 38" long when shelf is down. Length is increased to 48" when shelf is in upright position.

Product Guide

IBT-36 is designed to keep drinks cold and be able to serve customers easily. Unit is on casters for easy mobility and can be used indoors or outdoors.

Storage area can be used for cups, napkins, straws, extra drinks, etc.

Options

- ☐ **MPF-35** - Laminate Panel
- ☐ **MPE-30** - Laminate End
- ☐ **MLDR-35** - Laminate Doors
- ☐ **SCV** - Cover
- ☐ **MDC-35** - 2-Tier Display Case
- ☐ **BAC** - Casters, All with Brakes
- ☐ **PH** - Push Handle
- ☐ **KEY** - Replacement Keys
- ☐ Custom Sizes

*See Price List for more options

IMC Teddy •11 Ranick Drive South• Amityville, NY 11701• (800) 221-5644• info@imcteddy.com• www.imcteddy.com

IMC/TEDDY
DECADES OF FINE CRAFTSMANSHIP

IBT-36
Mobile Ice Station

DRAWINGS

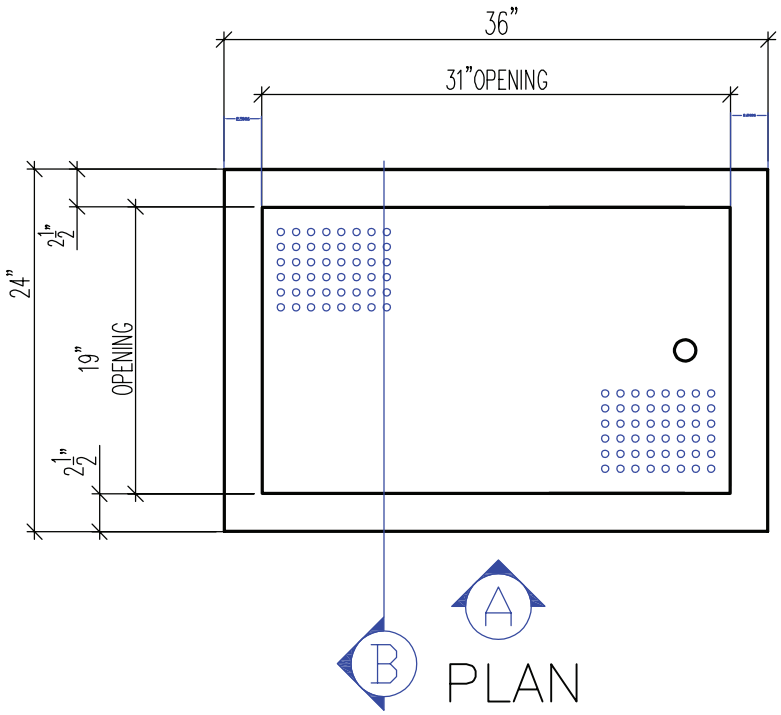

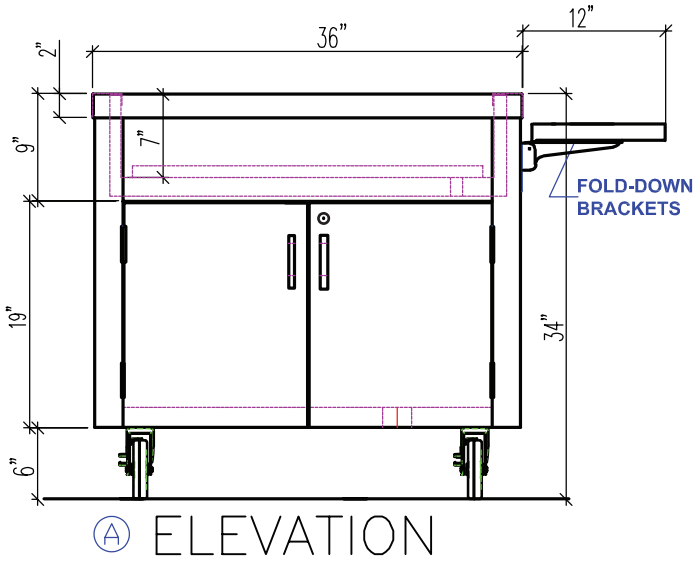

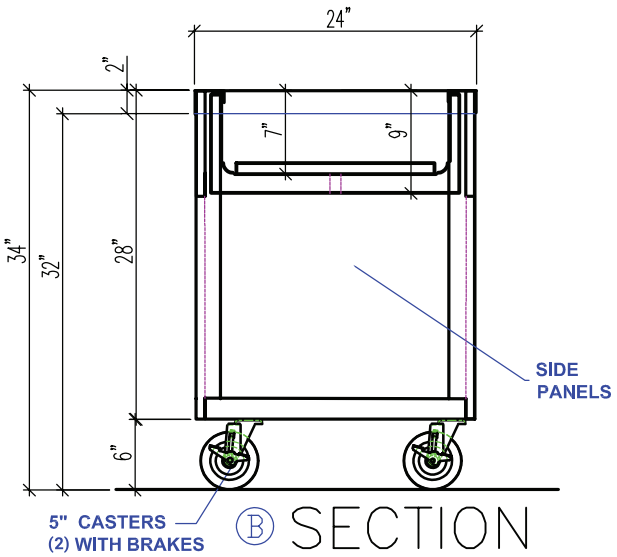

MOBILE ICE STATION

Model	Size (W x L x H)
□ IBT-36	24" x 36" x 34"

Specifications subject to change without notice.

IBT-36-30 0524