IMC/TEDDY
DECADES OF FINE CRAFTSMANSHIP

# OC-CW
## Corner Wall Cabinet

## General Information

**Project Name:** _____

**Consultant:** _____

**Item #:** _____

**Model #:** _____

**Quantity:** _____



OC-CWG Model Shown
w/ Glass Hinged Doors

## Specifications

**OC-CW Model** Corner Wall Cabinet is constructed of an 18GA type 304 stainless steel body and door. Cabinets are fully welded and brushed to a #4 finish. Standard open front with bottom.

Interior fitted with one (1) 18GA stainless steel fixed intermediate shelf. Optional hinged doors are 18GA stainless steel with pull handles and food grade hinges. Adjustable shelves are available.

Sloped top not available on corner wall cabinets.

## Product Guide

IMC Cabinets provide flexibility in designing storage space in the facility. Heavy duty rugged design. Add locks for security.

Corner cabinets are designed to provide efficient storage space for the proper utilization of wall surfaces and corners. They are installed with minimum ¼" screws into a studded wall or using wood blocks. Optional sizes and accessories are offered.

## Options

- ☐ **DRL** - Door Lock
- ☐ **EXSH** - Extra Shelf (Only Available at Time of Order)
- ☐ **CHE** - Concealed Hinge/Euro Style Door (Each)
- ☐ **KEY** - Replacement Keys

*See Price List for more options



IMC Teddy •11 Ranick Drive South• Amityville, NY 11701• (800) 221-5644• info@imcteddy.com• www.imcteddy.com

# OC-CW
## Corner Wall Cabinet

## DRAWINGS

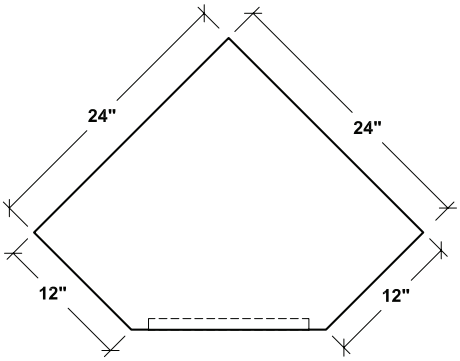


Plan

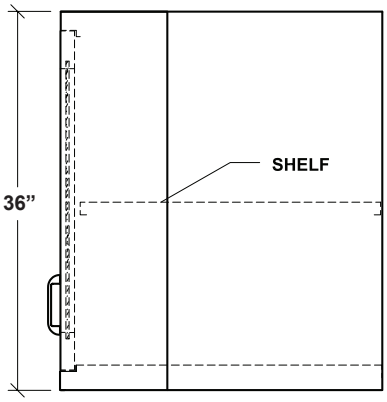


Section

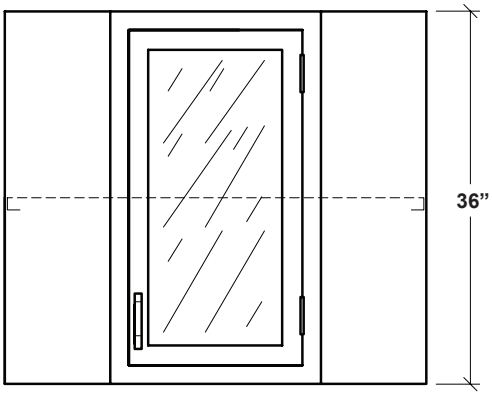


Elevation

### CORNER WALL CABINET

| Model | Size (W x L x H) | Description |
|---|---|---|
| ☐ OC-CW | 30” x 12” x 36" | Open Front |
| ☐ OC-CWS | 30” x 12” x 36” | Solid Door |
| ☐ OC-CWG | 30” x 12” x 36” | Glass Door |

**Specifications subject to change without notice.**



IMC Teddy •11 Ranick Drive South• Amityville, NY 11701• (800) 221-5644• info@imcteddy.com• www.imcteddy.com