IMC/TEDDY
DECADES OF FINE CRAFTSMANSHIP

ESTP
Equipment Stand w/ Scrap Tray

General Information

Project Name: _____

Consultant: _____

Item #: _____

Model #: _____

Quantity: _____



Specifications

ESTP Model Equipment Stand w/ Scrap Tray is constructed of a 16GA Type 304 stainless steel top and an 18GA Type 304 stainless steel undershelf. Legs are constructed of $1^{5/8"}$ tubing, 16GA S/S with adjustable bullet feet.

Understructure has 16GA S/S channeling welded to top to support heavy equipment.

Perforated area in top is $11^{1/4"}$ x $19^{1/2"}$ w/ 1/2" diameter holes which allows crumbs to fall into a scrap tray. Scrap tray is 12" x 20" x 2" deep and easily slides in and out for scrap clean up.

Unit is 30" x 30" x 34" high w/ 2" splashes on three sides. S/S hook on side is for hanging counter brush when not in use.

Sound deadening is standard on all Model #ESTP units.

Product Guide

Stainless steel equipment stand is engineered for heavy use and years of service in high volume Institutional, Commercial, or large food prep facilities.

Perforated area and scrap tray makes cleanup easy.

Options

- ☐ **C4** - 5" Dia. Swivel Casters 2 w/ Brakes (4)
- ☐ **C6** - 5" Dia. Swivel Casters 2 w/ Brakes (6)
- ☐ **GA-14** - 14GA Upgrade
- ☐ Custom Sizes
- ☐ **CR** - Crossrails
- ☐ **SCRAP** - Replacement Scrap Tray
- ☐ **FF-50** - S/S Flanged Feet

*See Price List for more options

ESTP-60 1025

IMC/TEDDY
DECADES OF FINE CRAFTSMANSHIP

ESTP
Equipment Stand w/ Scrap Tray

DRAWINGS

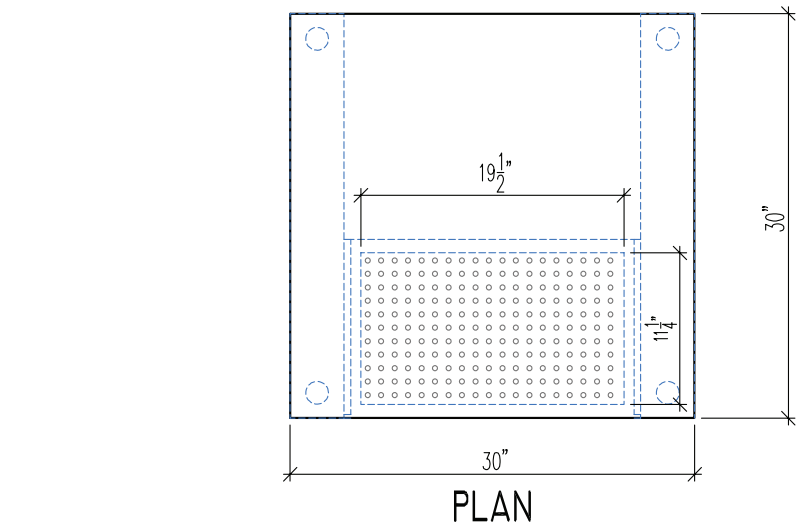

PLAN

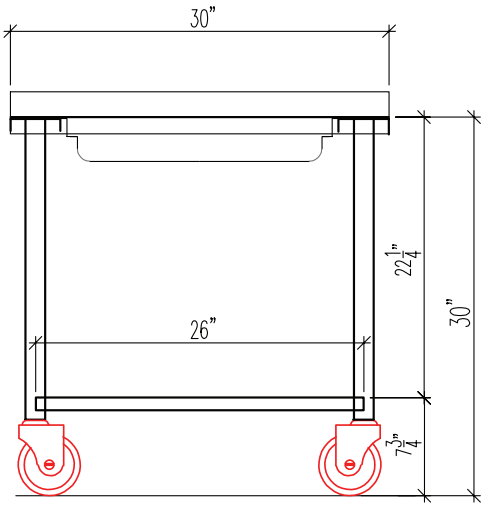

FRONT ELEVATION

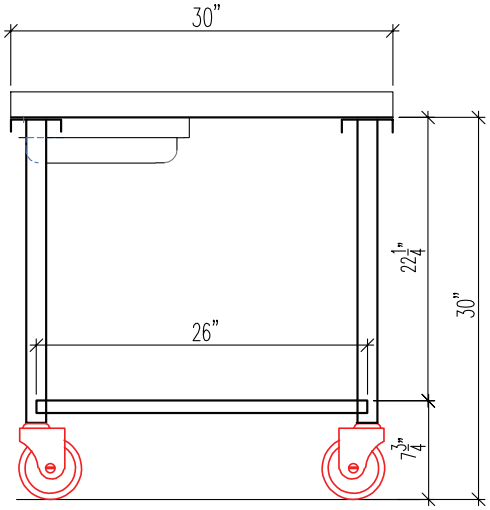

SIDE ELEVATION

EQUIPMENT STAND W/ SCRAP TRAY

Model	Size (W x L)
□ ESTP-24	30" x 24"
□ ESTP-30	30" x 30"
□ ESTP-36	30" x 36"
□ ESTP-48	30" x 48"
□ ESTP-60	30" x 60"
□ ESTP-72	30" x 72"
□ ESTP-84	30" x 84"
□ ESTP-96	30" x 96"

Specifications subject to change without notice.

ESTP-60 1025