IMC/TEDDY
DECADES OF FINE CRAFTSMANSHIP

BRS-1
Bar Station

General Information

Project Name: _____

Consultant: _____

Item #: _____

Model #: _____

Quantity: _____



Shown with Optional 5” Casters

Specifications

BRS-1 Model Bar Station is constructed of type 304 16GA stainless steel. Integral sink bowl with coved corners and pitched to a 1½” drain. Bowl is 12” x 14” x 8” Deep.

Large prep area in front of sink to prepare drinks. Removable 18GA stainless steel blender shelf. Storage space under sink for supplies. 18GA stainless steel partition separates sink from ice bin area. Ice bin is pitched to a 1” NPS drain to prevent melted ice build-up. (3) stainless steel garnish pans. Pans are ⅙ size, 2½” deep. (3) Plastic bottle holder on right side of ice bin. 18GA stainless steel removable speed rail holds liquor bottles.

Additional storage area under ice bin for extra supplies. Double pan doors with pull handles are constructed of 18GA S/S. Optional locks are available. Unit is mounted on adjustable bullet feet. Gooseneck faucet included.

Product Guide

The bar station can be used in a variety of places such as outdoor events, catering halls, restaurants, casinos, etc.

Unit can be easily customized and a variety of options make it very versatile. All stainless steel construction makes the unit very durable and easy to clean.

Options

- ☐ Ice Bin Cover
- ☐ Sink Cover
- ☐ Electronic Faucet
- ☐ **DRL** - Door Locks
- ☐ Sink Bowl Size
- ☐ (6) Plastic Bottle Holder
- ☐ Extra Garnish Pans
- ☐ Side Splashes

*See Price List for more options

IMC Teddy •11 Ranick Drive South• Amityville, NY 11701• (800) 221-5644• info@imcteddy.com• www.imcteddy.com

BRS-1
Bar Station

DRAWINGS

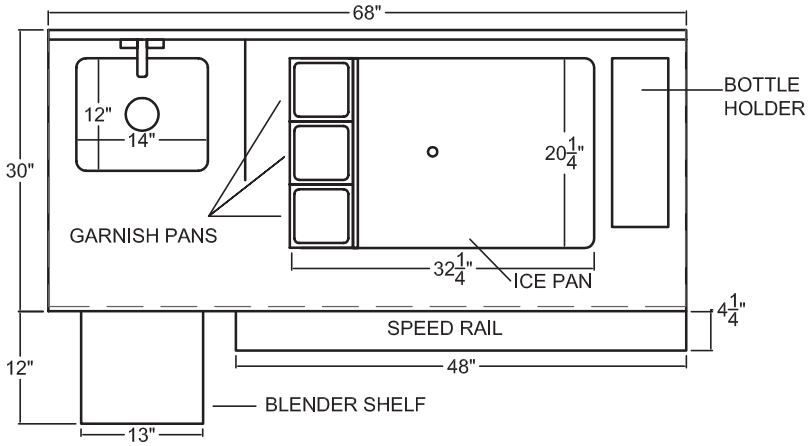

PLAN

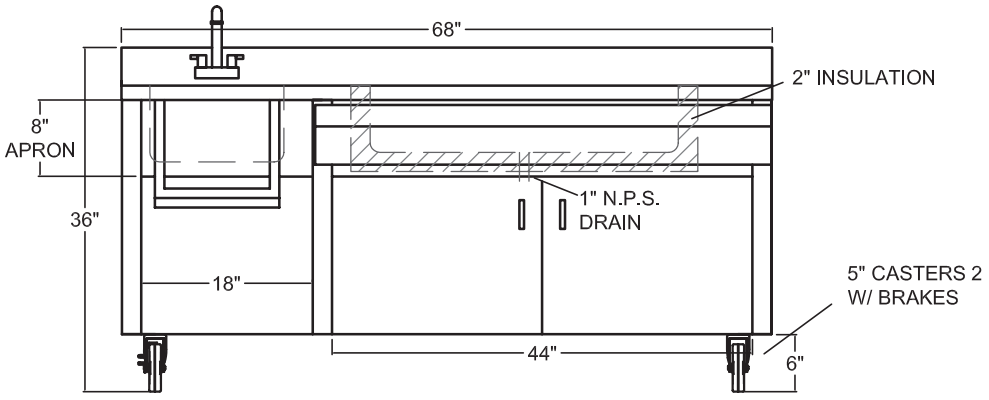

FRONT VIEW

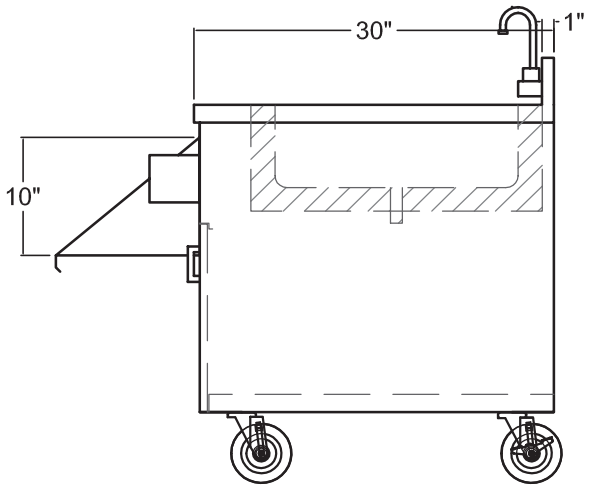

SIDE ELEVATION

BAR STATION

Model	Size (W x L x H)
☐ BRS-1	30" x 68" x 36"

Specifications subject to change without notice.