IMC/TEDDY
DECADES OF FINE CRAFTSMANSHIP

# IBP-1
## Mobile Ice Bin

## General Information

**Project Name:** _____

**Consultant:** _____

**Item #:** _____

**Model #:** _____

**Quantity:** _____



## Specifications

**IBP-1 Model** Mobile Ice Bin is constructed of Type 304 18GA stainless steel. Pull handle on lid makes it easy to open and close . Ice Bin is fully insulated to retain temperature. Unit has stainless steel push/pull handle and is mounted on 1⅝" legs with cross-rails & (4) 3" casters, (2) with brakes. Coved corners and built in pitch to 1" NPS drainer.

Ice Scoop holder on the front for easy storage and prevents users from leaving scoop in the ice. Hinged lid folds back and stays open during use. Overall size is 23" Wide x 30" Long x 34" High.

## Product Guide

Ice Bin is 18" Deep for large ice storage. Use in restaurants, bars, outside catering events and many other places. All stainless steel construction makes unit easy to clean and keep sanitary.

## Options

- ☐ Adjustable Bullet Feet
- ☐ Customizable Ice Scoop
- ☐ **DRL** - Door Lock
- ☐ No Handle
- ☐ Custom Sizes

*See Price List for more options



IMC Teddy •11 Ranick Drive South• Amityville, NY 11701• (800) 221-5644• info@imcteddy.com• www.imcteddy.com

# IBP-1
## Mobile Ice Bin

## DRAWINGS

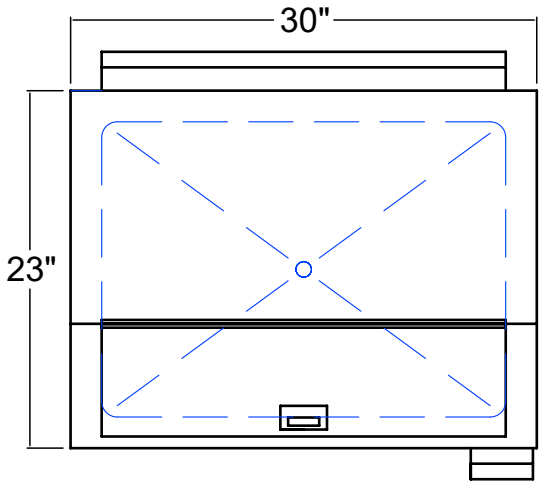


PLAN

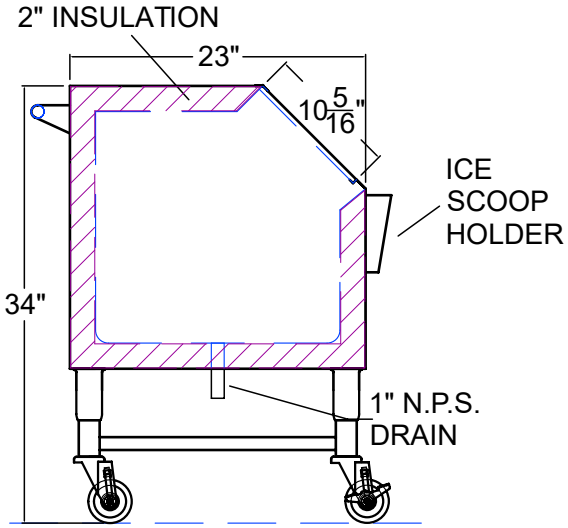


SIDE ELEVATION

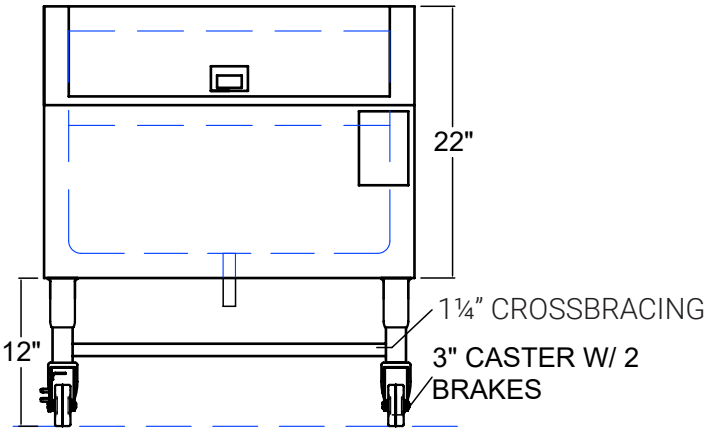


FRONT VIEW

### MOBILE ICE BIN

| Model | Size (W x L x H) |
|---|---|
| ☐ IBP-1 | 23" x 30" x 34" |

Specifications subject to change without notice.

IBP-40 0524