IMC/TEDDY
DECADES OF FINE CRAFTSMANSHIP

BL
Standard Duty, Louvered or Solid Shelving

General Information

Project Name: _____

Consultant: _____

Item #: _____

Model #: _____

Quantity: _____



Specifications

BL Model Standard Duty Shelving is constructed of 18GA Type 304 stainless steel. Shelf edges are turned down 90 degrees and in 45 degrees for safety. Stainless steel gussets are welded to corners and secured to posts with posi-loc screws.

Posts are 1⅝" OD tubes, 16GA type 300 series stainless steel, with top caps, and adjustable stainless steel feet. All shelving units and components are NSF-approved and all exposed surfaces finished brush satin.

Product Guide

For general purpose use for dry storage or in refrigerators and freezers.

Easily assembled and adjusted. Solid surface design permits quick clean up of spills. Louvers allow uniform temperature distribution.

Stationary units have stainless steel posi-grip adjustable foot inserts.

Mobile units provided with 5" casters. See selection guide and information.

Options

- ☐ **RC-5** - 5" Rubber Casters - Standard
- ☐ **PCY-5** - 5" Poly Casters - Heavy Duty
- ☐ **PCYS-5** - 5" S/S Poly Casters - Heavy Duty
- ☐ **PPC-5** - 5" Plate Poly Casters - Heavy Duty
- ☐ **GF-2** - Grease Fittings
- ☐ **FF-50** - S/S Flanged Feet
- ☐ **BAC** - Brakes on All Casters
- ☐ **RB-10** - Revolving Bumpers
- ☐ **CBM-20** - Corner Bumpers
- ☐ **BF-40** - S/S Bullet Feet
- ☐ **AES** - Aeroform Shelves
- ☐ **GA-12** - 12GA Upgrade
- ☐ **GA-14** - 14GA Upgrade
- ☐ **SRE-60** - Shelf Reinforcement (Solid Only)
- ☐ **PLG-70** - Perimeter Ledge
- ☐ **SEI-80** - Seismic Earthquake Shelving
- ☐ **WELD** - Set-Up & Welded Unit
- ☐ **PCAP** - Post Caps

*See Price List for more options

IMC Teddy •11 Ranick Drive South• Amityville, NY 11701• (800) 221-5644• info@imcteddy.com• www.imcteddy.com

IMC/TEDDY
DECADES OF FINE CRAFTSMANSHIP

BL
Standard Duty, Louvered or Solid Shelving

DRAWINGS

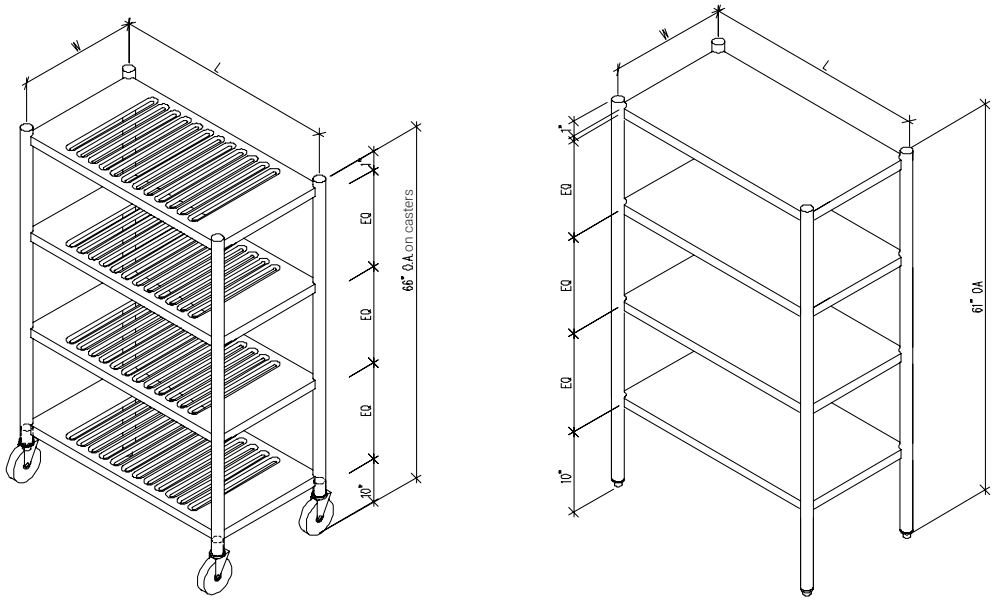

SHELVING UNITS, LOUVERED
4-Tier Complete Unit, 61" O.A. Height - Add 5" for Casters

Model	Size (W x L)	Model	Size (W x L)	Model	Size (W x L)
☐ BL-2418-4L	18" x 24"	☐ BL-2421-4L	21" x 24"	☐ BL-2424-4L	24" x 24"
☐ BL-3018-4L	18" x 30"	☐ BL-3021-4L	21" x 30"	☐ BL-3024-4L	24" x 30"
☐ BL-3618-4L	18" x 36"	☐ BL-3621-4L	21" x 36"	☐ BL-3624-4L	24" x 36"
☐ BL-4218-4L	18" x 42"	☐ BL-4221-4L	21" x 42"	☐ BL-4224-4L	24" x 42"
☐ BL-4818-4L	18" x 48"	☐ BL-4821-4L	21" x 48"	☐ BL-4824-4L	24" x 48"
☐ BL-5418-4L	18" x 54"	☐ BL-5421-4L	21" x 54"	☐ BL-5424-4L	24" x 54"
☐ BL-6018-4L	18" x 60"	☐ BL-6021-4L	21" x 60"	☐ BL-6024-4L	24" x 60"
☐ BL-7218-4L	18" x 72"	☐ BL-7221-4L	21" x 72"	☐ BL-7224-4L	24" x 72"

SHELVING UNITS, SOLID
4-Tier Complete Unit, 61" O.A. Height - Add 5" for Casters

Model	Size (W x L)	Model	Size (W x L)	Model	Size (W x L)
☐ BL-2418-4S	18" x 24"	☐ BL-2421-4S	21" x 24"	☐ BL-2424-4S	24" x 24"
☐ BL-3018-4S	18" x 30"	☐ BL-3021-4S	21" x 30"	☐ BL-3024-4S	24" x 30"
☐ BL-3618-4S	18" x 36"	☐ BL-3621-4S	21" x 36"	☐ BL-3624-4S	24" x 36"
☐ BL-4218-4S	18" x 42"	☐ BL-4221-4S	21" x 42"	☐ BL-4224-4S	24" x 42"
☐ BL-4818-4S	18" x 48"	☐ BL-4821-4S	21" x 48"	☐ BL-4824-4S	24" x 48"
☐ BL-5418-4S	18" x 54"	☐ BL-5421-4S	21" x 54"	☐ BL-5424-4S	24" x 54"
☐ BL-6018-4S	18" x 60"	☐ BL-6021-4S	21" x 60"	☐ BL-6024-4S	24" x 60"
☐ BL-7218-4S	18" x 72"	☐ BL-7221-4S	21" x 72"	☐ BL-7224-4S	24" x 72"

**More sizes available, check price book pg.42-43*

Note: All above shelving units can be ordered as standard units with 3 or 5 shelves per unit, by simply changing the last digit in the model number to reflect the correct number desired - See price book pg. 42-43
(Ex. BL-3018-5S, BL-3018-3L)

Specifications subject to change without notice.

BL-90 0524