IMC/TEDDY
DECADES OF FINE CRAFTSMANSHIP

OC
Overhead Wall Cabinet

General Information

Project Name: _____

Consultant: _____

Item #: _____

Model #: _____

Quantity: _____



OC Shown with Optional (HS) Hinged Doors

Specifications

OC Model Overhead Wall Cabinet is constructed of 18GA type 304 stainless steel with sanitary slope top (flat top available). Flush, open front cabinet to have top rail, sides, rear and bottom of stainless steel seamless construction, welded and ground smooth. Interior fitted with two (2) 18GA stainless steel adjustable shelves, removable without tools.

Optional sliding doors are 18GA stainless steel with flush pulls and ball bearing bottom rollers, operating in sanitary open track. Hinged doors have pull handles and food grade hinges.

Product Guide

IMC Overhead Wall Cabinets are specially designed to provide storage space above equipment height. Utilizes space and helps maintain security.

Optional sizes and door designs make this the choice of most designers.

Options

- ☐ **DRL**- Door Lock
- ☐ **EXSH** - Extra Shelf (2 Standard)
- ☐ **SECG1** - 1/4" Tempered Glass (Per Door)
- ☐ **CSGD2** - Center Rail Glass Door (Per Door)
- ☐ **CHE** - Concealed Hinge/Euro Style Door (Each)
- ☐ **FLT** - Flat Top
- ☐ **PVL** - Provision for Lamps
- ☐ **KEY** - Replacement Keys
- ☐ Call Factory for Custom Sizes

*See Price List for more options

IMC Teddy •11 Ranick Drive South• Amityville, NY 11701• (800) 221-5644• info@imcteddy.com• www.imcteddy.com

OC
Overhead Wall Cabinet

DRAWINGS

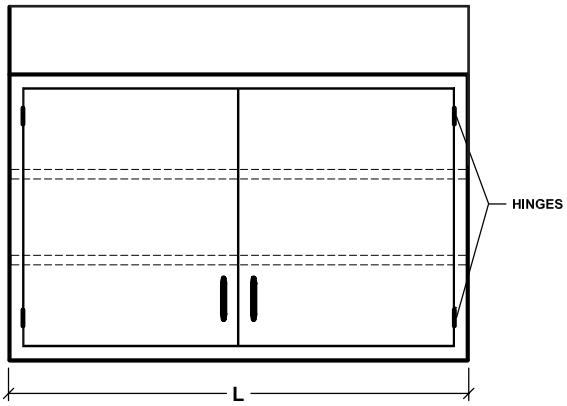

FRONT ELEVATION

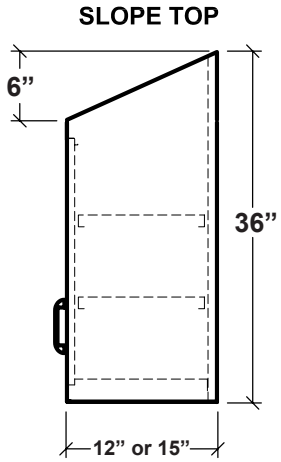

SIDE ELEVATION

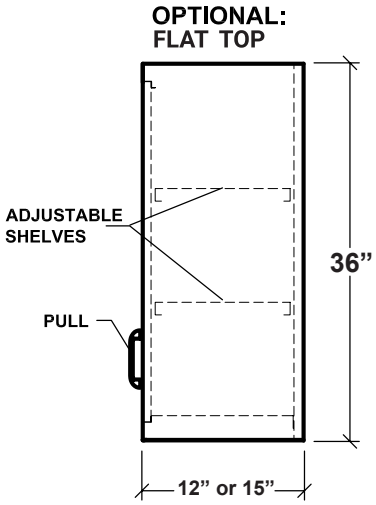

SIDE ELEVATION

OVERHEAD WALL CABINET

Open Front Model #	Hinged Doors Model #	Sliding Doors Model #	Size (W x L)	Doors
◻ OC-2412	◻ OC-2412HS	-	12” x 24”	1
◻ OC-3012	◻ OC-3012HS	-	12” x 30”	2
◻ OC-3612	◻ OC-3612HS	◻ OC-3612SS	12” x 36”	2
◻ OC-4812	◻ OC-4812HS	◻ OC-4812SS	12” x 48”	2
◻ OC-6012	◻ OC-6012HS	◻ OC-6012SS	12” x 60”	3
◻ OC-7212	◻ OC-7212HS	◻ OC-7212SS	12” x 72”	3
◻ OC-8412	◻ OC-8412HS	◻ OC-8412SS	12” x 84”	4
◻ OC-9612	◻ OC-9612HS	◻ OC-9612SS	12” x 96”	4
◻ OC-2415	◻ OC-2415HS	-	15” x 24”	1
◻ OC-3015	◻ OC-3015HS	-	15” x 30”	2
◻ OC-3615	◻ OC-3615HS	◻ OC-3615SS	15” x 36”	2
◻ OC-4815	◻ OC-4815HS	◻ OC-4815SS	15” x 48”	2
◻ OC-6015	◻ OC-6015HS	◻ OC-6015SS	15” x 60”	3
◻ OC-7215	◻ OC-7215HS	◻ OC-7215SS	15” x 72”	3
◻ OC-8415	◻ OC-8415HS	◻ OC-8415SS	15” x 84”	4
◻ OC-9615	◻ OC-9615HS	◻ OC-9615SS	15” x 96”	4

Specifications subject to change without notice.

IMC Teddy •11 Ranick Drive South• Amityville, NY 11701• (800) 221-5644• info@imcteddy.com• www.imcteddy.com