IMC/TEDDY
DECADES OF FINE CRAFTSMANSHIP

UT
Utility Cart

General Information

Project Name: _____

Consultant: _____

Item #: _____

Model #: _____

Quantity: _____



Specifications

UT Model Utility Cart is constructed of Type 304 tubular stainless steel frames with integral handle on both sides. 20GA stainless steel shelves have non-drip edges. 5" diameter swivel casters (2) with brakes & rotating bumpers are standard.

Product Guide

All welded construction for rigidity and strength. Non-drip edges and easy cleaning make this ideal for all sanitary locations.

Options

- ☐ 14GA Correctional Package
- ☐ Custom Sizes
- ☐ Other Shelf Spacing/Sizing

*See Price List for more options

IMC Teddy •11 Ranick Drive South• Amityville, NY 11701• (800) 221-5644• info@imcteddy.com• www.imcteddy.com

DRAWINGS

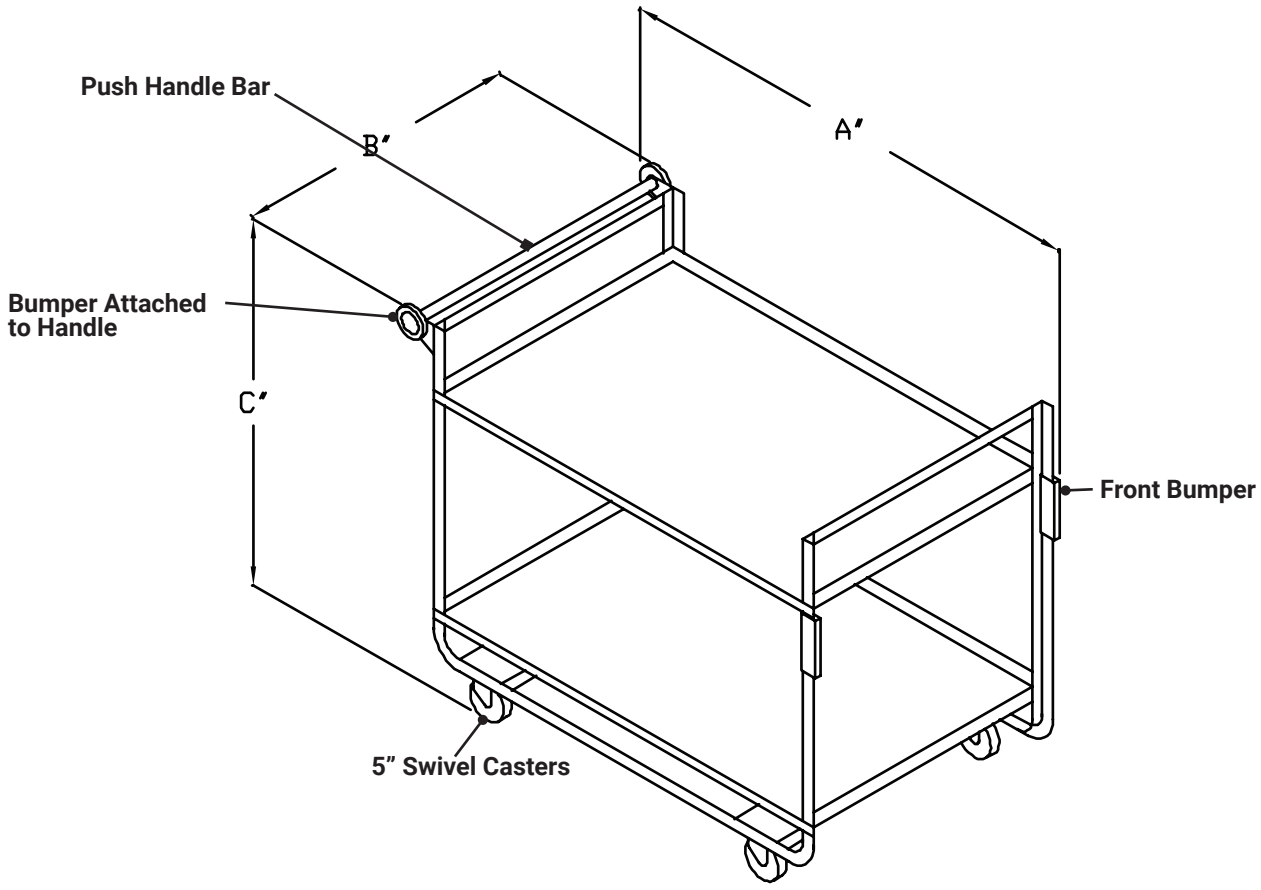

UTILITY CARTS

Model	# Of Levels	Size (W x L x H)
☐ UT2236-2	2	22” x 36” x 36½”
☐ UT2236-3	3	22” x 36” x 36½”
☐ UT3038-2	2	30” x 38” x 40”
☐ UT3038-3	3	30” x 38” x 40”

Specifications subject to change without notice.