IMC/TEDDY
DECADES OF FINE CRAFTSMANSHIP

UP
Pot/Pan/Utility, Louvered or Solid Shelving

General Information

Project Name: _____

Consultant: _____

Item #: _____

Model #: _____

Quantity: _____



Specifications

UP Model Pot/Pan/Utility System is constructed of 16GA Type 304 stainless steel. Shelf corners are fully welded, ground and polished smooth. A raised die-formed ledge encloses a stainless steel gusset welded to undersurface of shelf and fitted with two stainless steel screws for shelf height adjustment.

Posts are 1⅝" OD tubes, 16GA 18-8 type 300 series, with top caps, and sanitary, adjustable stainless steel style feet. Units and components to NSF approved and all exposed surfaces finished brush satin.

Product Guide

UP Systems are used in an efficient food service establishment. Pots, pans, racks and others are quickly transported between equipment and stored when not in use.

Easily assembled and adjusted.

Solid surface design provides easy access and quick clean up of spills. Large louvers allow uniform temperature distribution.

Stationary units provided with stainless steel posi-grip adjustable foot inserts.

Mobile units provided with 5" casters. See selection guide and information.

Options

- ☐ **RC-5** - 5" Rubber Casters - Standard
- ☐ **PCY-5** - 5" Poly Casters - Heavy Duty
- ☐ **PCYS-5** - 5" S/S Poly Casters - Heavy Duty
- ☐ **PPC-5** - 5" Plate Poly Casters - Heavy Duty
- ☐ **GF-2** - Grease Fittings
- ☐ **FF-50** - S/S Flanged Feet
- ☐ **BAC** - Brakes on All Casters
- ☐ **RB-10** - Revolving Bumpers
- ☐ **CBM-20** - Corner Bumpers
- ☐ **BF-40** - S/S Bullet Feet
- ☐ **AES** - Aeroform Shelves
- ☐ **GA-12** - 12GA Upgrade
- ☐ **GA-14** - 14GA Upgrade
- ☐ **SRE-60** - Shelf Reinforcement (Solid Only)
- ☐ **PLG-70** - Perimeter Ledge
- ☐ **SEI-80** - Seismic Earthquake Shelving
- ☐ **WELD** - Set-Up & Welded Unit
- ☐ **PCAP** - Post Caps

*See Price List for more options

IMC Teddy • 11 Ranick Drive South • Amityville, NY 11701 • (800) 221-5644 • info@imcteddy.com • www.imcteddy.com

UP
Pot/Pan/Utility, Louvered or Solid Shelving

DRAWINGS

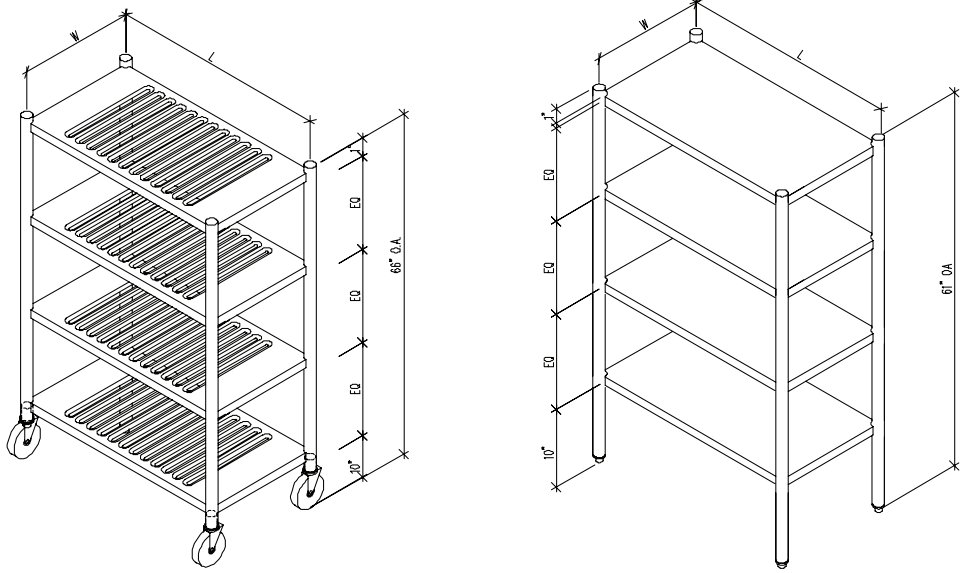

Louvered Shelving Units 4-Tier Complete Unit					
Model	Size (W x L)	Model	Size (W x L)	Model	Size (W x L)
☐ UP-3024-4L	24" x 30"	☐ UP-2427-4L	27" x 24"	☐ UP-2430-4L	30" x 24"
☐ UP-3624-4L	24" x 36"	☐ UP-3027-4L	27" x 30"	☐ UP-3030-4L	30" x 30"
☐ UP-4224-4L	24" x 42"	☐ UP-3627-4L	27" x 36"	☐ UP-3630-4L	30" x 36"
☐ UP-4824-4L	24" x 48"	☐ UP-4227-4L	27" x 42"	☐ UP-4230-4L	30" x 42"
☐ UP-5424-4L	24" x 54"	☐ UP-4827-4L	27" x 48"	☐ UP-4830-4L	30" x 48"
☐ UP-6024-4L	24" x 60"	☐ UP-5427-4L	27" x 54"	☐ UP-5430-4L	30" x 54"
☐ UP-7224-4L	24" x 72"	☐ UP-6027-4L	27" x 60"	☐ UP-6030-4L	30" x 60"
		☐ UP-7227-4L	27" x 72"	☐ UP-7230-4L	30" x 72"

Solid Shelving Units 4-Tier Complete Unit					
Model	Size (W x L)	Model	Size (W x L)	Model	Size (W x L)
☐ UP-3024-4S	24" x 30"	☐ UP-2427-4S	27" x 24"	☐ UP-2430-4S	30" x 24"
☐ UP-3624-4S	24" x 36"	☐ UP-3027-4S	27" x 30"	☐ UP-3030-4S	30" x 30"
☐ UP-4224-4S	24" x 42"	☐ UP-3627-4S	27" x 36"	☐ UP-3630-4S	30" x 36"
☐ UP-4824-4S	24" x 48"	☐ UP-4227-4S	27" x 42"	☐ UP-4230-4S	30" x 42"
☐ UP-5424-4S	24" x 54"	☐ UP-4827-4S	27" x 48"	☐ UP-4830-4S	30" x 48"
☐ UP-6024-4S	24" x 60"	☐ UP-5427-4S	27" x 54"	☐ UP-5430-4S	30" x 54"
☐ UP-7224-4S	24" x 72"	☐ UP-6027-4S	27" x 60"	☐ UP-6030-4S	30" x 60"
		☐ UP-7227-4S	27" x 72"	☐ UP-7230-4S	30" x 72"

**More sizes available, check price book pg.52*

Note: All above shelving units can be ordered as standard units with 3 or 5 shelves per unit, by simply changing the last digit in the model number to reflect the correct number desired - See price book pg. 52
(Ex. UP-3024-5S, UP-3024-3L)

Specifications subject to change without notice.

IMC Teddy • 11 Ranick Drive South • Amityville, NY 11701 • (800) 221-5644 • info@imcteddy.com • www.imcteddy.com