IMC/TEDDY
DECADES OF FINE CRAFTSMANSHIP

# SX
## Extra Heavy Duty, Louvered or Solid Shelving

## General Information

**Project Name:** _____

**Consultant:** _____

**Item #:** _____

**Model #:** _____

**Quantity:** _____



## Specifications

**SX Model** Extra Heavy Duty Shelving is constructed of 14GA Type 304 stainless steel, with double-folded shelf edges turned down 90 degrees and in 180 degrees. Stainless steel gussets are welded to the underside of each edge of the shelf and secured to posts with posi-loc screws.

Uprights are 1⅝" OD, 16GA 18-8 type 300 series stainless steel posts, with welded-in top caps, and non-removable, sanitary, adjustable stainless steel feet. All shelving units and components are NSF approved and all exposed surfaces finished brush satin.

## Product Guide

SX shelves are for large institutional or commissary or where equipment abuse is likely. It withstands heaviest loads with years of maintenance-free use. Easily assembled and adjusted.

Solid surface design provides easy access and quick clean up of spills. Large louvers allow uniform temperature distribution.

Stationary units provided with stainless steel posi-grip adjustable foot inserts.

Mobile units provided with 5" casters. See selection guide and information.

## Options

- ☐ **RC-5** - 5" Rubber Casters - Standard
- ☐ **PCY-5** - 5" Poly Casters - Heavy Duty
- ☐ **PCYS-5** - 5" S/S Poly Casters - Heavy Duty
- ☐ **PPC-5** - 5" Plate Poly Casters - Heavy Duty
- ☐ **GF-2** - Grease Fittings
- ☐ **FF-50** - S/S Flanged Feet
- ☐ **BAC** - Brakes on All Casters
- ☐ **RB-10** - Revolving Bumpers
- ☐ **CBM-20** - Corner Bumpers
- ☐ **BF-40** - S/S Bullet Feet
- ☐ **AES** - Aeroform Shelves
- ☐ **GA-12** - 12GA Upgrade
- ☐ **GA-14** - 14GA Upgrade
- ☐ **SRE-60** - Shelf Reinforcement (Solid Only)
- ☐ **PLG-70** - Perimeter Ledge
- ☐ **SEI-80** - Seismic Earthquake Shelving
- ☐ **WELD** - Set-Up & Welded Unit
- ☐ **PCAP** - Post Caps

*See Price List for more options



IMC Teddy •11 Ranick Drive South• Amityville, NY 11701• (800) 221-5644• info@imcteddy.com• www.imcteddy.com

# SX
## Extra Heavy Duty, Louvered or Solid Shelving

## DRAWINGS

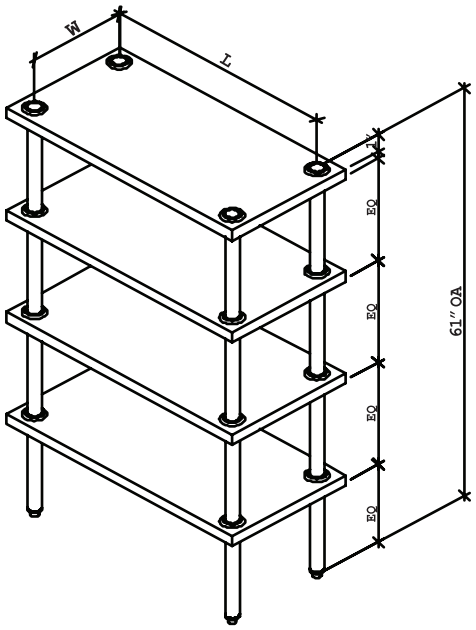


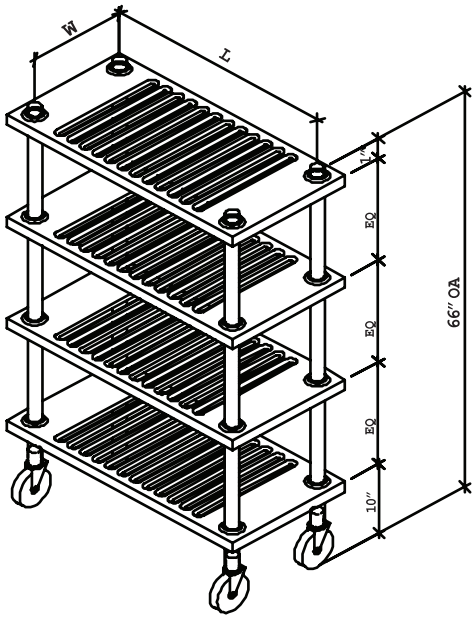


| Louvered Shelving Units 4-Tier Complete Unit | | | | | |
|---|---|---|---|---|---|
| Model | Size (W x L) | Model | Size (W x L) | Model | Size (W x L) |
| ☐ SX-3018-4L | 18" x 30" | ☐ SX-3021-4L | 21" x 30" | ☐ SX-3024-4L | 24" x 30" |
| ☐ SX-3618-4L | 18" x 36" | ☐ SX-3621-4L | 21" x 36" | ☐ SX-3624-4L | 24" x 36" |
| ☐ SX-4218-4L | 18" x 42" | ☐ SX-4221-4L | 21" x 42" | ☐ SX-4224-4L | 24" x 42" |
| ☐ SX-4818-4L | 18" x 48" | ☐ SX-4821-4L | 21" x 48" | ☐ SX-4824-4L | 24" x 48" |
| ☐ SX-5418-4L | 18" x 54" | ☐ SX-5421-4L | 21" x 54" | ☐ SX-5424-4L | 24" x 54" |
| ☐ SX-6018-4L | 18" x 60" | ☐ SX-6021-4L | 21" x 60" | ☐ SX-6024-4L | 24" x 60" |

| Solid Shelving Units 4-Tier Complete Unit | | | | | |
|---|---|---|---|---|---|
| Model | Size (W x L) | Model | Size (W x L) | Model | Size (W x L) |
| ☐ SX-3018-4S | 18" x 30" | ☐ SX-3021-4S | 21" x 30" | ☐ SX-3024-4S | 24" x 30" |
| ☐ SX-3618-4S | 18" x 36" | ☐ SX-3621-4S | 21" x 36" | ☐ SX-3624-4S | 24" x 36" |
| ☐ SX-4218-4S | 18" x 42" | ☐ SX-4221-4S | 21" x 42" | ☐ SX-4224-4S | 24" x 42" |
| ☐ SX-4818-4S | 18" x 48" | ☐ SX-4821-4S | 21" x 48" | ☐ SX-4824-4S | 24" x 48" |
| ☐ SX-5418-4S | 18" x 54" | ☐ SX-5421-4S | 21" x 54" | ☐ SX-5424-4S | 24" x 54" |
| ☐ SX-6018-4S | 18" x 60" | ☐ SX-6021-4S | 21" x 60" | ☐ SX-6024-4S | 24" x 60" |

**More sizes available, check price book pg.48-49*

**Note: All above shelving units can be ordered as standard units with 3 or 5 shelves per unit, by simply changing the last digit in the model number to reflect the correct number desired - See price book pg. 48-49**
**(Ex. SX-3018-5S, SX-3018-3L)**

**Specifications subject to change without notice.**

SX-70 0823