IMC/TEDDY
DECADES OF FINE CRAFTSMANSHIP

SMS
Universal Slicer & Mixer Stand

General Information

Project Name: _____

Consultant: _____

Item #: _____

Model #: _____

Quantity: _____



Model #SMS
Shown w/ Optional
Accessory Holder,
Tray Slides, Casters
& Posi Lock

Specifications

SMSS Model Universal Slicer & Mixer Stand is constructed of 14GA Type 304 stainless steel with sanitary marine work-top and flush, open cabinet body of 18GA stainless steel. Optional pan slides are adjustable and removable without tools. Bottom has sanitary marine edge at front and is supported on heavy duty stainless steel adjustable legs.

"SMS" unit is provided with heavy duty 5" diameter casters (two with brakes).

Sound deadening is standard on all Model #SMS units.

Product Guide

IMC Slicer/Equipment Stands are specially designed to provide sanitary carefree use - to permit quick, efficient and thorough cleaning.

These units are compact design and utilized throughout the facility to store and transport equipment. Tray slides and drawers are used to transport and store hand appliances and other accessories.

Options

- ☐ **DS** - Drop Shelf
- ☐ **PL** - Posi-Lock
- ☐ **BAC** - Brakes on All Casters
- ☐ **AH** - Accessory Holder
- ☐ **UMD** - Undermount Drawer
- ☐ **AUS** - Additional Undershelf
- ☐ **PSLD** - Pan Slides (Per Set)
- ☐ **RVB** - Revolving Bumpers

*See Price List for more options

IMC Teddy • 11 Ranick Drive South • Amityville, NY 11701 • (800) 221-5644 • info@imcteddy.com • www.imcteddy.com

SMS
Universal Slicer & Mixer Stand

DRAWINGS

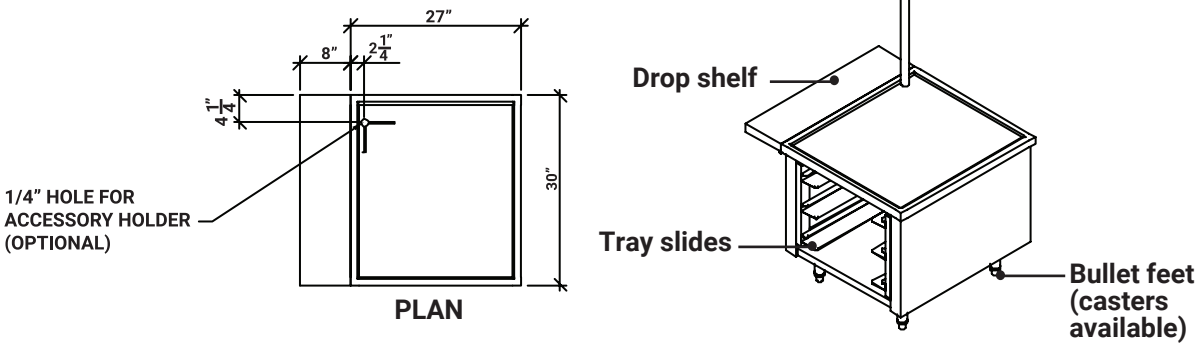

SMS - Universal Slicer/Mixer Stand (shown with options)

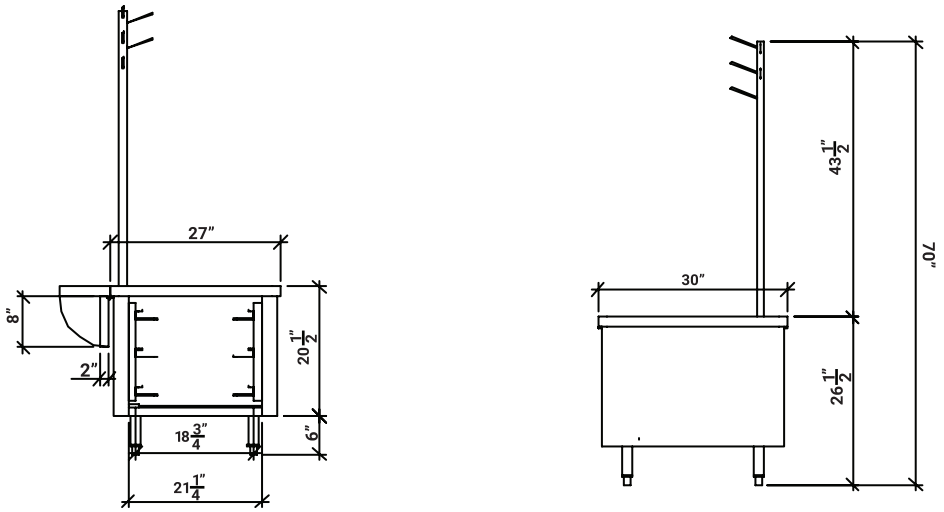

UNIVERSAL SLICER & MIXER STAND

Model	Size (W x L)	Pan Size
☐ SMSS-30	30" x 27"	18" x 26"
☐ SMSS-24	24" x 24"	13" x 18"
☐ SMS-30	30" x 27"	18" x 26"
☐ SMS-24	24" x 24"	13" x 18"

Specifications subject to change without notice.

SMSS-010 0626