BACK BAR EQUIPMENT

Model: BB24N

Natural Refrigerant R-290 Model

24” Back Bar Cooler

ENERGY STAR® Qualified Commercial Refrigerator

Textured baked black enamel finish exterior, stainless steel countertop and interior back with reinforced stainless steel floor.



Options and Accessories

(upcharge and lead times may apply)

Additional epoxy coated shelves	Food storage rated stainless steel interior (NSF-7)
Stainless steel shelves	Hinged glass door (consult factory)
Wine rack	

Consult factory for other model configurations, options and accessories.

Continental® Refrigerator

WARRANTY 7 Year Parts & Labor 7 Year Compressor

Project Name:

Model Specified:

Location:

Item No: **Quantity:**

AIA #: **SIS #:**

Standard Model Features

REFRIGERATION SYSTEM

- Performance rated refrigeration system
- Natural, environmentally safe, high efficiency R-290 refrigerant[1]
- Automatic, hot gas condensate evaporator
- Extra large, balanced evaporator coil

CABINET ARCHITECTURE

- High density, non-CFC polyurethane foamed-in-place insulation
- Rear and side venting louvered panels
- Magnetic snap in door gasket
- Cylinder keyed security lock
- Stainless steel reinforced threshold
- 5” high casters (cannot be changed, footing installed)

MODEL FEATURES

- Electronic control, off cycle defrost
- Easily accessible and serviceable condensing unit

[1] R-290 refrigerant meets all federal and state regulatory requirements.

APPROVAL:

Model Specifications

DIMENSIONAL DATA

Net Capacity (cubic feet)	8 (226 l)
Width, Overall (inches)	24 1/8 (613 mm)
Depth, Overall (inches) (including handle & condenser)	31 7/16 (798 mm)
Height, Overall (inches)	38 13/16 (986 mm)
Bottle/Can Capacity (12 oz)	55 (per shelf)
Number of Doors	1
Number of Shelves	2

REFRIGERANT DATA

Condensing Unit Size (H.P.)	1/5
Capacity (BTU per hour)*	1470

ELECTRICAL DATA

Voltage (International)	115/60/1 (220/50/1)
Feed Wires (including ground)	3
Total Amps (International)	2.5 (2.7)
10 ft. Cord/Plug [attached] (International)	Yes (No)

SHIPPING DATA

Weight (pounds)	200 (91 kg)
Height - Crated (inches)	43 1/4 (1099 mm)
Width - Crated (inches)	35 3/4 (908 mm)
Depth - Crated (inches)	37 1/4 (946 mm)

* Rating @ +25°F evaporator, 90°F ambient
Figures in parentheses reflect metric equivalents rounded to the nearest whole unit.



Equipped with one NEMA-5-15P Plug
(varies by country)

Model Plan Views

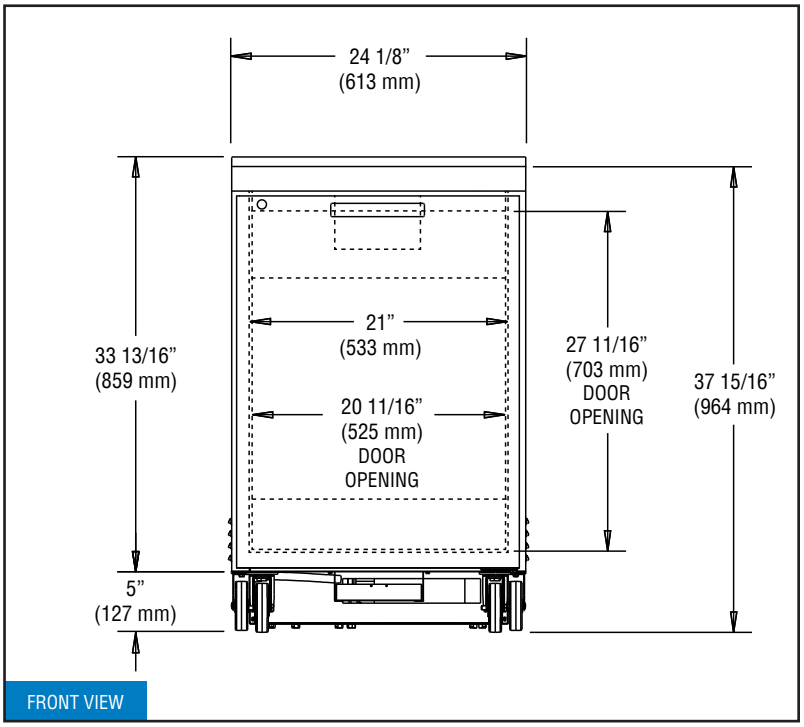

FRONT VIEW

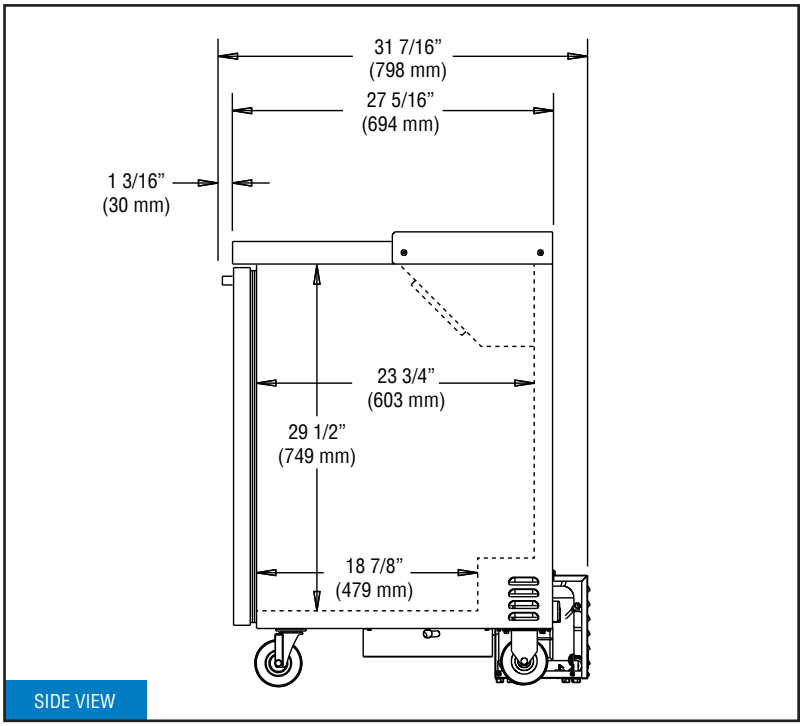

SIDE VIEW

IMPORTANT NOTE: If the cabinet is located directly against a wall, a minimum clearance of 3" is required on sides, front and rear.

Continental Refrigerator

Toll-Free: 800-523-7138
Phone: 215-244-1400
Fax: 215-244-9579

539 Dunksferry Road
Bensalem, PA 19020
www.continentalrefrigerator.com

Due to our continued efforts in developing innovative products, specifications subject to change without notice.

PROUDLY DESIGNED & ASSEMBLED IN THE U.S.A.

© Copyright 2021. Continental Refrigerator.
A Division of National Refrigeration & Air Conditioning Products, Inc.

REVISED: 2/13/25